LUMEX®
by graham-field

FR601E POWERED CLINICAL CARE RECLINER WITH PIVOT-ARM ASSEMBLY AND OPERATING INSTRUCTIONS

SAVE THIS MANUAL FOR FUTURE USE.

LX_FR601E-INS-LAB-RevA26

CONTENTS

INTRODUCTION 3
INTENDED USE 3
IMPORTANT SAFETY PRECAUTIONS—PLEASE READ BEFORE USE 3
WARNINGS 4
ELECTROMAGNETIC COMPATIBILITY (EMC) INFORMATION 5
ASSEMBLY 6
UNPACKING 6
PRODUCT DESCRIPTION 6
ELECTRICAL CONTROL LOCATIONS 7
PLUG LOCATION 7
LOW BATTERY ALARM 7
OPERATION 8
TENTE® CASTERS 8
MODELS: FR601EPN / FR601EUN SERIES 8
INDIVIDUAL LOCKING CASTERS 8
DIRECTIONAL (SWIVEL) CASTERS 8
MODELS: FR601EPC / FR601EUC SERIES 8
CENTRAL LOCKING CASTERS 8
OPERATION OF CENTRAL LOCKING SYSTEM 8
RECLINER OPERATION 9
RECLINE (BUTTONS 1 & 2) 9
BATTERY 9
PENDANT 9
LOW BATTERY INDICATION 9
NEW BATTERY INDICATION 9
TRENDELENBURG 9
TRENDELENBURG (SHOCK POSITION) ACTIVATION HAND TRIGGER 9
RECLINER HAND PENDANT 10
RECLINER HAND PENDANT (OPERATION) 10
PAIRING THE BLUETOOTH HAND PENDANT 10
SIDE TABLE OPERATION 11
RAISE SIDE TABLE 11
LOWER SIDE TABLE 11
FOOTPLATE OPERATION 11
PIVOT-ARM OPERATION 12
OPEN THE PIVOT ARM 12
CLOSE THE PIVOT ARM 12
RECLINERS WITH HEAT AND MASSAGE OR HEAT ONLY FEATURE 13
INSTALLATION AND OPERATING GUIDE 13
DESCRIPTION 14
CONNECTION 14
HEAT AND MASSAGE / HEAT ONLY / USB INSTALLATION INSTRUCTIONS 15
HEAT AND MASSAGE / HEAT ONLY TROUBLESHOOTING GUIDE 16
USB INSTRUCTIONS 18
CARE AND MAINTENANCE 19
EVERY THREE MONTHS 19
UPHOLSTERY MAINTENANCE AND STAIN REMOVAL 19
FOR GUARDIAN, PATRIOT PLUS, RENAISSANCE AND SAVOY FABRICS ONLY 19
DISINFECTANTS 19
CDC RECOMMENDATIONS 20
TECHNICAL SPECIFICATIONS 21
USB SYSTEM SPECIFICATIONS 21
DISPOSAL AND KEY TO SYMBOLS 22
DISPOSAL 22
KEY TO SYMBOLS 22
TROUBLESHOOTING 23
BATTERY REPLACEMENT 24
PREVENTIVE MAINTENANCE SCHEDULE 25
LIMITED WARRANTY 26
INDEX 27

INTRODUCTION

This manual contains assembly, operation, and maintenance instructions for the Lumex Powered Clinical Care Recliner Series FR601E Models. Read the entire manual carefully before using your recliner, and refer to it during use if you have questions. If you have further questions, call Graham-Field / Lumex Technical Support at 1.770.368.4700.

INTENDED USE

Lumex Powered Clinical Care Recliners are intended to make the care, treatment and recovery of patients easier and more comfortable. Lumex Powered Clinical Care Recliners are used in a wide range of healthcare applications including Dialysis, Oncology, Drug Delivery, Same Day Surgery and Post-Operative Recovery. Lumex Powered Clinical Care Recliners are ideal for use in hospitals, clinics and rehabilitation centers.

The Lumex Series FR601E Powered Clinical Care Recliner supports patient weights up to 500 lb (226.8 kg), EVENLY DISTRIBUTED.

IMPORTANT SAFETY PRECAUTIONS—PLEASE READ BEFORE USE

The safety statements presented in this chapter refer to the basic safety information that the Series FR601E Recliner user must pay attention to and abide by. There are additional safety statements in other chapters or sections, which may be the same as or similar to the following, or specific to the operations. Please note the following special statements, used throughout this manual, and their significance:

⚠ **WARNING: Indicates a potential hazard situation or unsafe practice that, if not avoided, could result in death or serious personal injury.**

⚠ **CAUTION: Indicates a potential hazard or unsafe practice that, if not avoided, could result in minor or moderate personal injury.**

▲ **NOTICE: Indicates a potential hazard or unsafe practice that, if not avoided, could result in product or property damage.**

Info: *Provides application recommendations or other useful information to ensure that you get the most from your product.*

WARNINGS

⚠ **WARNING: Read this entire manual BEFORE assembly or operation.**

⚠ **WARNING: Periodically inspect all parts and replace as needed.**

⚠ **WARNING: DO NOT use near an open flame, as the recliner could be a combustion source, resulting in fire, property damage, and severe physical injury.**

⚠ **WARNING: The pivot-arm MUST NOT be used as a patient or caregiver support while open. The recliner may tip and become unstable if weight is placed on the pivot-arm when in the open position.**

⚠ **WARNING: Service and repair of the Lumex Series FR601E Pivot-Arm Powered Clinical Care Recliner must be performed by a Graham-Field authorized distributor. GF Health Products, Inc. is NOT responsible for any consequence resulting from any unauthorized service or repair.**

⚠ **WARNING: This product has a maximum weight capacity of 500 lb (226.8 kg), EVENLY DISTRIBUTED.**

⚠ **WARNING: Casters must be locked at all times to prevent unwanted movements.**

⚠ **WARNING: Caregivers must remain attentive and maintain control of the patient during all transfers into or out of the recliner. Before transfer, ensure the casters are locked and the transfer path is clear of obstacles.**

⚠ **WARNING: DO NOT allow a patient to enter, exit, sit on, or place their full weight on the head or foot end of the recliner while it is in a partially or fully reclined position. Patient ingress or egress must be performed only from the intended seated position.**

⚠ **WARNING: DO NOT allow the patient to sit or place their full weight on the head or foot end of the recliner. Improper loading may cause the recliner to become unstable or tip.**

⚠ **WARNING: The electronics and actuator contain no serviceable components. DO NOT attempt to open the electronics; this may void the warranty and may result in damage to the unit. If service is required, consult your Graham-Field authorized distributor.**

⚠ **WARNING: DO NOT open the batteries. If service is required, consult your Graham-Field authorized distributor. Replace the batteries when damaged, faulty, or every two years.**

⚠ **WARNING: The Powered Clinical Care Recliner is equipped with a built-in battery backup system: nevertheless, the unit should remain plugged into wall receptacle during normal use.**

⚠ **WARNING: Use of the battery backup is recommended for power failure, emergency, and when there is no reliable AC power or properly grounded electrical wall outlet.**

⚠ **DANGER: SHOCK HAZARD — To reduce the risk of electric shock, unit is to be serviced by qualified personnel ONLY.**

⚠ **DANGER: SHOCK HAZARD — To avoid risk of electric shock, this equipment must ONLY be connected to a supply mains with protective earth.**

⚠ **WARNING: When using the battery backup, continuous operation must not exceed two hours with 1.5 min. of operation to 15 min. of rest.**

⚠ **WARNING: Keep all moving parts free of obstructions (i.e. blankets, heating blankets/pads, tubing, wiring, furniture, walls, and other types of products).**

⚠ **WARNING: If the patient is using an oxygen system or similar medical device, ensure all tubing and lines are clear of the recliner's moving parts, pivot points, casters, and mechanisms. Pinched, kinked, or damaged tubing may interrupt oxygen delivery or device function.**

⚠ **WARNING: Check the range of movement on all motors to ensure they do not bind in the Full Up or Full Down positions.**

⚠ **WARNING: Ensure that the power cord DOES NOT get tangled around the recliner frame during normal operation of the FR601E.**

⚠ **WARNING: DO NOT open assemblies such as the Actuators, Hand Control Pendant, or Control Box. If unauthorized personnel perform work on these components, the manufacturer's warranty becomes void.**

⚠ **WARNING: The Trendelenburg Quick Release trigger when activated will quickly lower the patient's head below their feet. ONLY use in emergency situations. Ensure there are no obstructions that can cause the trigger to be released unexpectedly. When activating the trigger, help guide the back downward.**

⚠ **WARNING: When not in use, DO NOT leave the recliner in a recline position.**

⚠ **WARNING: At NO time should the patient be permitted to enter or exit from the ends of the recliner when in partial or total recline position.**

⚠ **WARNING: Ensure the brakes are locked when the recliner is in use.**

⚠ **WARNING: To turn electric controls on, plug into wall receptacle. To turn off, remove plug from wall receptacle. The electric powered chairs do not have a separate on / off switch.**

⚠ **WARNING: ALWAYS disconnect the power source when troubleshooting or servicing the chair.**

⚠ **WARNING: Lowering recliner in supine position onto an object may cause tipping and personal injury.**

⚠ **CAUTION: Stow away power cord when NOT in use to prevent injury or damage.**

⚠ **WARNING: Unauthorized modification of your recliner or the use of non-Lumex replacement parts may change the structure of the recliner and could create a hazardous condition, which may result in serious injury and will void the warranty.**

⚠ **WARNING: GF Health Products, Inc. specifically disclaims responsibility for any bodily injury or property damage which may occur during any use which does not comply with federal, state or local laws or ordinances.**

ELECTROMAGNETIC COMPATIBILITY (EMC) INFORMATION

⚠ **WARNING: Medical Electrical Equipment needs special precautions regarding EMC and needs to be installed and put into service according to the EMC information provided in this manual.**

⚠ **WARNING: Electronic equipment may be influenced by Radio Frequency (RFI). Caution should be exercised with regard to the use of portable communications in the area around such equipment. Portable RF communications equipment (including peripherals such as antenna cables and external antennas) should be used no closer than 30 cm (12 inches) to any part of the Lumex equipment including specified Lumex equipment cables. Degradation of the performance of the Lumex equipment could result.**

⚠ **WARNING: If RFI causes erratic behavior, unplug the electric Lumex equipment immediately. Leave unplugged while transmission is in progress.**

⚠ **WARNING: The use of accessories, transducers, and cables other than those specified by the manufacturer may result in increased emissions or decreased immunity of the Lumex equipment. GF cables and accessories include motor cables, mains cable, pendant cables, and back up battery and cable.**

⚠ **WARNING: This equipment should not be used adjacent to or stacked with other equipment. If adjacent or stacked use with other equipment is necessary, this Lumex equipment and the other equipment should be observed to verify that they are operating normally.**

⚠ **WARNING: The EMISSIONS characteristics of this equipment make it suitable for use in industrial areas and hospitals (CISPR 11 class A). If it is used in a residential environment (for which CISPR 11 class B is usually required) this equipment might not offer adequate protection to radio frequency communication services. The user might need to take mitigation measures, such as relocating or reorienting the equipment.**

ASSEMBLY

UNPACKING

1. Check for obvious damage to the carton or its contents. If damage is evident, notify the carrier and your Graham-Field authorized distributor.
2. Remove all packaging materials from recliner base.

FR601E POWER RECLINER PRODUCT DESCRIPTION

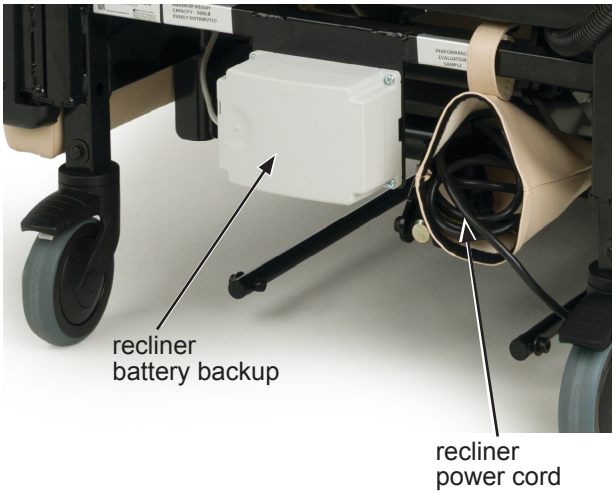

ELECTRICAL CONTROL LOCATIONS

Pendant Control Storage Location

The hand pendant control is connected by a tether cord. When hand pendant is not in use, properly store on back of recliner push bar (figure right).

▲ **NOTICE: Place the pendant on the back push bar when not in use. Keep pendant tether cord clear of moving parts.**

Power Cord (Plug) Location

The power cord is located in a pouch on the back of the recliner (figure right).

▲ **NOTICE: DO NOT position the unit so that it is difficult to disconnect the plug.**

Plug the recliner power cord into any grounded outlet.

▲ **NOTICE: The unit should be plugged into a wall receptacle during normal use.**

▲ **NOTICE: Before rolling the recliner, ensure the power cord is unplugged from the AC outlet.**

⚠ **WARNING: The FR601E Powered Recliner is equipped with a built-in battery backup system: nevertheless, the unit should remain plugged into a wall receptacle during normal use. The battery backup is recommended for power failures in an emergency ONLY.**

Backup Battery / Low Battery Alarm

The FR601E Powered Recliner is equipped with a built-in battery system (figure right). Backup battery has an audible and visual low battery alarm. When the system requires charging, a continuous beep will sound during motor operation.

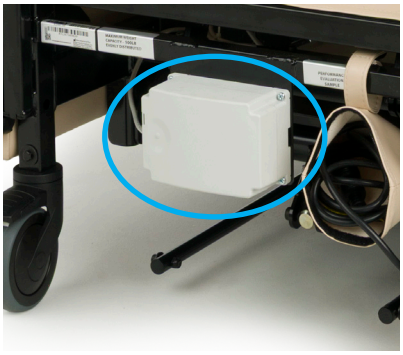

LED	Indication of operation
Solid yellow	Charging (battery not ready)
No LED light	Fully charged (battery ready)
Flashing yellow	Error during charging

OPERATION
TENTE® CASTERS

⚠ **WARNING: Casters must be locked at all times to prevent unwanted movements.**

All Lumex Powered Clinical Care Recliners now feature the latest design, all-plastic casters from TENTE, (figure(s) below). Specifically designed for use in healthcare environments, the new casters are easier to clean, easier to move, and tolerate a wide array of cleaners and chemicals. Each caster is made from high-grade synthetic materials and features a double-ball bearing swivel head. The wheel center is made of polypropylene and the tire tread of TENTEprene (thermoplastic rubber). The black non-marking tires feature precision ball bearings.

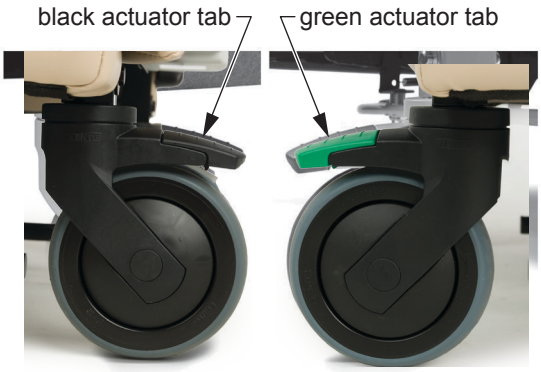

total locking caster

directional (swivel) locking caster (right front caster)

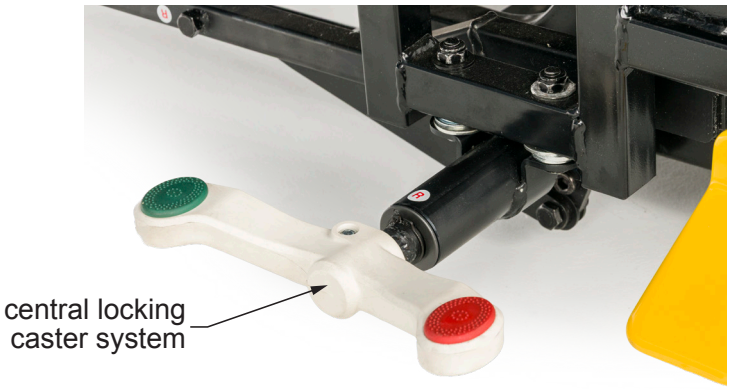

Individual Lock Casters:

Models: FR601EPN / FR601EUN Series

Locking casters: These models feature three total locking casters, identified by black actuator tabs that lock both the wheel and the swivel. To activate the total lock, press down on the BLACK actuator tab until it locks. To release the total lock, press on the raised portion of the actuator tab until the lever is back in the normal operating position.

Directional (swivel) caster: The fourth caster only, located on the right front position of the recliner, is a directional (swivel) locking caster, identified by a green actuator tab. The directional lock caster locks in one of two 180-degree positions relative to the frame (forward and backward) and allows the recliner to track straight when pushed. To activate the directional lock, press down on the GREEN actuator tab until it locks — you may need to move the recliner slightly until the caster locks in a straight line with the recliner frame. To release the directional lock, press on the raised portion of the actuator tab until the lever is back in the normal operating position.

Models: FR601EPC / FR601EUC Series
Operation of Central Locking System:

(A) Push down on red pad to set caster brakes. (B) Push down on green pad to middle position to release caster brakes. Push the green tab fully downward to engage the directional lock for the front right caster.

Central Locking Caster System makes it easier to immobilize the recliner by stepping on one foot pedal to lock or release all 4 casters at one time. The ergonomic benefit for the operator, should not be underestimated. Additionally, the lever for the central locking lever is always located at the same position on the equipment, thus easy to locate for care staff.

RECLINER OPERATION

The Lumex Series FR601E Powered Recliner features infinite positions for patient comfort. Trendelenburg (or Shock) Position can be activated by a caregiver using the release trigger located on the push bar.

Recline & Seated (Buttons 1 & 2)

Press and hold **Recline Position** button (1) until desired recline is achieved. Press and hold **Seated Position** button (2) until desired recline is achieved (image on next page).

Battery: LED illuminates when battery is low. The **LED** will be illuminated for 2 seconds after the last button-activation.

Trendelenburg Position

Info: *This position can be activated by a caregiver.*

Standing behind the recliner, grasp the **Trendelenburg activation hand trigger** (back of the recliner) while gently pushing down with your hand on the recliner back until it comes to a stop.

To bring recliner out of the Trendelenburg Position: grasp the Trendelenburg activation hand trigger and lift the back of the recliner up into the desired position or use the hand pendant Seated Position button until you reach a desired position.

RECLINER HAND PENDANT OPERATION

Hand Pendant:

The pendant is a Bluetooth® Low Energy (BLE) hand control unit. The pendant uses a standard CR2031 battery (coin cell) to power the hand pendant. The battery lasts for approximately two (2) years of normal use.

⚠ **WARNING: DO NOT submerge the hand control in water.**

Changing Battery:

To change the battery, open the battery cover on the back using a coin or a similar tool to turn the arrow counterclockwise from the locked state to the unlocked state.

Low battery indication - When the battery power level falls below 20%, the **LED** will flash 4 times when a key is pressed.

New battery indication - When the battery has been changed, the **LED** will be lit for 4 seconds after the first key press.

⚠ **WARNING: Ensure that recliner is secure and assembled as instructed on previous pages before operating.**

Plug the power cord into any grounded outlet.

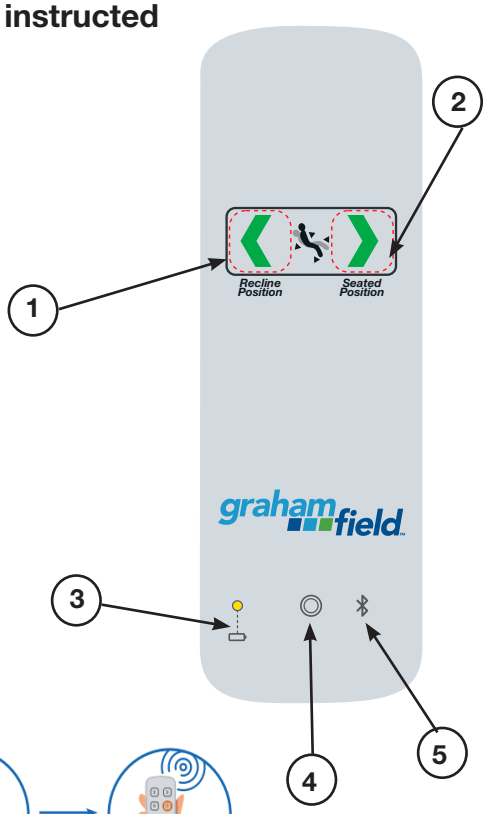

Hand Pendant Operation

BUTTON	FUNCTION
1	RECLINE POSITION
2	SEATED POSITION
3	LOW BATTERY NOTIFICATION
4	PLACE LOCKOUT KEY HERE
5	BLUETOOTH INDICATOR

PAIRING THE BLUETOOTH HAND PENDANT

▲ **NOTICE: The pendant will be delivered paired already. If pairing is needed after delivery, follow these steps.**

Direct pairing is used for pairing a LINAK hand pendant control directly to a LINAK actuator control box that supports BLE.

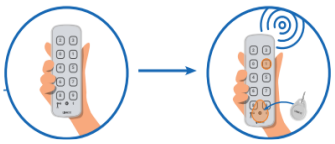

1. **Enter pairing mode.** Place magnet key (provided) over the lockout key location on the bottom center of the pendant and press the **Seated Position** button until the actuator control box (not shown)nearby begins to beep (approximately 3 seconds).

▲ **NOTE:** Control box is located under the seat near the center of the recliner.

▲ **NOTE:** Access the control box from the rear of the recliner.

2. Move hand pendant closer to the control box you are pairing with. Control box will begin to beep faster once you are close enough to the control box.
3. Press the **Seated Position** button (1) again until the beeping stops to pair the hand pendant.

▲ **NOTE:** When in pairing mode, the control box will begin to BEEP, and the LED will begin to blink. The control unit LED will begin to blink with the same frequency as the nearest control box.

SIDE TABLE OPERATION

See illustration(s) at right for side table operation.

Raise Side Table

Raise the side table all the way up and slide in toward the armrest until tabs engage slots in mount bracket. Press down lightly on table to ensure locking tabs are engaged.

Lower Side Table

Lift the side table up slightly until tabs disengage slots and pull table away from armrest. Lower side table to self-storing position.

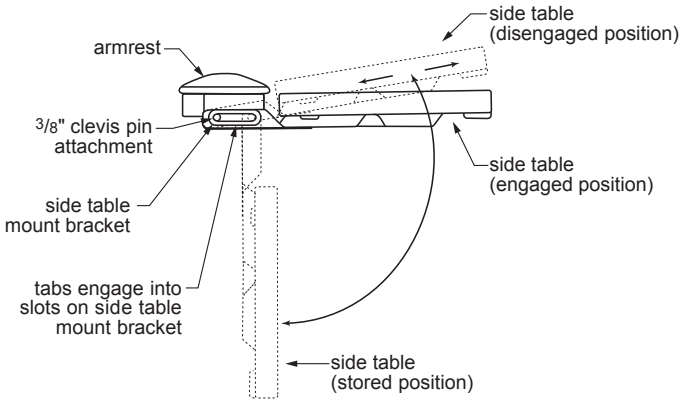

Side Table

FOOTPLATE OPERATION

FR601E Recliner features a self-storing footplate, shown above, for patient comfort and convenience during patient transfer. The footplate is easily extended when needed and can be stored safely out of the way when not in use. To operate the footplate, pull it out from underneath the recliner until fully extended. To return the footplate to the stored position, push the footplate back underneath the recliner until it stops and is safely stored under the recliner.

⚠ **WARNING: Before using the footplate, ensure the casters are in the locked position and the Footplate is in the fully-extended position.**

⚠ **WARNING: Caregivers: Exercise caution when moving around the front of the recliner when the Footplate is in the extended position.**

⚠ **WARNING: Caregivers: Always advise patients that the Footplate has been extended. DO NOT allow a patient to stand on the Footplate unattended.**

PIVOT-ARM OPERATION

The FR601E Powered Clinical Care Recliner features two pivot-arms. The pivot-arms make cleaning the recliner much easier and more efficient. The pivot-arms are hinged at the back of the recliner.

Latch Pivot-Arm

⚠ **WARNING: The pivot-arm Feature is a CAREGIVER OPERATED FEATURE. A patient MUST NOT attempt operation of the pivot-arms while seated in the recliner.**

Open the Pivot-Arm

⚠ **WARNING: The caregiver must be positioned on either the left or right side of the recliner, directly in front of the pivot-arm to be operated; do not operate the pivot-arm from front or rear of recliner.**

1. Step down on the YELLOW RELEASE LEVER, located toward the front of the recliner, to unlock the pivot-arm on that side.
2. Gently swing open the pivot-arm to the desired degree.
3. Once maintenance or cleaning is complete, return the arm to the closed and locked position.

Close the Pivot-Arm:

⚠ **WARNING: The caregiver must be positioned on either the left or right side of the recliner, directly in front of the pivot-arm to be operated; do not operate the pivot-arm from front or rear of recliner.**

1. Pivot the Arm back toward the front of the recliner until the pivot-arm stops. Step down on the YELLOW RELEASE LEVER, located toward the front of the recliner. Continue to push the pivot-arm over the locking pin and then step off of the YELLOW RELEASE LEVER, thereby engaging the locking pin in the arm latch.
2. Pull outward on the arm to ensure the arm is properly locked before use of the recliner.

⚠ **WARNING: Recliners have moving parts that create potential pinch points. When the pivot-arms are open, those points are exposed. DO NOT leave patients in the recliner unattended with the pivot-arms in the open position. DO NOT leave the recliner unattended or reclined with the pivot-arms in the unlocked, open position. DO NOT move recliner with patient while pivot-arms are unlocked and in open position.**

⚠ **WARNING: The pivot-arm MUST NOT be used as a patient or caregiver support while open. The recliner may tip and become unstable if weight is placed on the pivot-arm when in the open position.**

▲ **CAUTION: When opening the pivot-arms, ensure there is nothing in the way of the pivoting arm. Damage to the vinyl upholstery may result if the pivot-arm impacts any object. The pivot-arms are best operated when the recliner is in the upright position.**

RECLINERS WITH HEAT AND MASSAGE OR HEAT ONLY FEATURE

HEAT AND MASSAGE: SERIES FR601EPNH / FR601EUNH / FR601EPCH / FR601EUCH

HEAT ONLY: SERIES FR601EPNO / FR601EPCO / FR601EUNO / FR601EUCO

INSTALLATION AND OPERATING GUIDE

Tools required: masking or packaging tape

⚠ **WARNING: Important! Read and understand these instructions before assembling or using the Specialty Healthcare Seating Heat and Massage / Heat Only Unit. If you do not understand any part of these warnings, cautions or instructions, contact a healthcare professional for direction in the use of this product. If the Heat and Massage / Heat Only Unit is not properly assembled, personal injury and damage to the Heat and Massage / Heat Only Unit could result.**

⚠ **WARNING: The recliner seat and back heating elements are wired to operate in series only. Do not change the system wiring in any way.**

⚠ **WARNING: If components are damaged or missing, contact your Graham-Field authorized distributor immediately. DO NOT use substitute parts. Use only Lumex replacement parts. The use of non-Lumex replacement parts could cause personal injury, property damage, and void the warranty.**

⚠ **WARNING: GF Health Products, Inc. assumes no responsibility for any damage or injury caused by improper assembly or use of this product.**

Description

The Heat and Massage Unit offers three levels of seat and back heat, as well as a gentle or firm massage function for just the lower back or both lower and upper back; the Heat Only Unit offers three levels of seat and back heat. The Lumex Healthcare Seating Heat and Massage / Heat Only Unit is a low-voltage (12V) Heat and Massage / Heat Only Unit, controllable by the user and / or caregiver via a handheld pendant located on the patient right side arm of the recliner. It is designed to enhance the comfort of the patient / resident during the use of Lumex Powered Clinical Care Recliners.

Main Components

All Heat and Massage / Heat Only functions are built into the recliner.

Heat and Massage Pendant (switch) Shown on Inside of recliner

Connection

Info: *The Heat and Massage Unit comes pre-installed in Lumex Powered Clinical Care Recliners with the Heat and Massage Option. The Heat Only Unit comes pre-installed in Lumex Powered Clinical Care Recliners with the Heat Only Option. The USB Unit comes pre-installed in Powered Clinical Care Recliners with the USB Option.*

To activate the power recline, heat, massage, and USB functions, plug the power cord into the AC wall outlet.

Heat and Massage / Heat Only / USB Connections

1. Raise the back skirt on the lower rear of the back cushion, as shown above, and use masking or packaging tape to temporarily secure it up and out of the way. This will permit uninterrupted access to the back compartment while making the cable connection.
2. The Control Module and Transformer, shown below, are contained in a single unit mounted in the back compartment.

Heat Only with USB

Heat Only

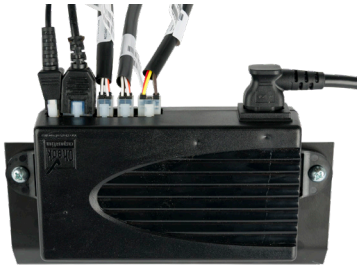

Heat and Massage with USB

Heat and Massage

Note: *These functions come already pre-installed. These installation instructions are for troubleshooting purposes.*

USB Functions Only Section (No Heat and / or Massage) Instructions

1. USB only recliner configuration will not have a control module. Instead, the 90 degree plug of the Y-cable will be inserted directly into the medical AC/DC adapter.

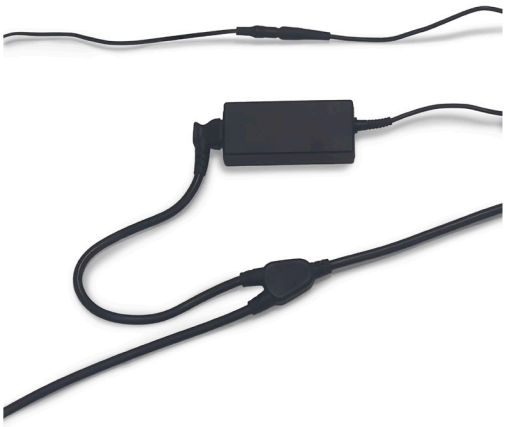

Heat and Massage / Heat Only Unit Operation Instructions

1. The Heat and Massage / Heat Only Unit is operated using the buttons (switches) located on the inside right arm of the recliner, shown above.

Heat and Massage Option Shown

2. **The Heat and Massage Selector Switch Faceplate**, shown above, has two membrane switches. The left switch controls the Massage Function and the right switch controls the Heat Function. You can use either the Heat or Massage or both functions at the same time.

   The Heat Only Pendant Switch Faceplate has a single membrane switch to control the Heat Only Function.

3. **Heat and Massage *MASSAGE* Option:** Press the ***MASSAGE*** switch to start this function. The Massage Function Settings are as follows:
   a) Press selector switch for Setting 1: Gentle Lower Back Massage.
   b) Press selector switch AGAIN for Setting 2: Firm Lower Back Massage.
   c) Press selector switch AGAIN for Setting 3: Gentle Upper and Lower Back Massage.
   d) Press selector switch AGAIN for Setting 4: Firm Upper and Lower Back Massage.
   e) Press selector switch AGAIN: Massage function shuts off.

4. **Heat and Massage** or **Heat Only *HEAT* Option**: Press the ***HEAT*** switch to start this function. The Heat Function Settings are as follows:
   a) Press selector switch for Setting 1: High Heat, 104˚F (40˚C), brightest LED.
   b) Press selector switch AGAIN for Setting 2: Medium Heat, 101˚F (38.6˚C), bright LED.
   c) Press selector switch AGAIN for Setting 3: Low Heat, 100˚F (37.8˚C), dim LED.
   d) Press selector switch AGAIN: Heat function shuts off.
   e) There is a small red indicator light, which illuminates only during the Heat function, in the selector switch. The light's brightness is determined by the Heat level being used:
   Brightest = High Heat; **Dimmest = Low Heat.**

5. The Unit automatically shuts off at the following times:
   a) **HEAT FUNCTION:** After one hour of continuous use at the same level.
   b) **MASSAGE FUNCTION:** After fifteen minutes of continuous use at the same level.
   c) To restart the Unit, follow previous steps 4 and 5.

Heat and Massage / Heat Only Unit Troubleshooting Guide

The cables and connections need to be validated. This will require the services of a maintenance person and a clear working area.

1. INSPECTION: Perform the following checks. If a working recliner of the same model is available, use it for comparison.
   a) Is the AC cord properly connected to the power supply? Is the cable from the power supply to the control module junction box in place?
   b) With the power supply AC cord plugged into a live AC outlet, does the small light to the left of the white seat symbol (located on the switch) light up when the switch is pressed repeatedly or is there any indication of massage operation?

⚠ **WARNING: Disconnect the power cord from the AC outlet before performing the following steps!**

   c) Is there any sign of external damage to the handheld pendant or wire?
   d) Is there any sign of external damage to the recliner?
   e) Do any of the cables show any sign of damage or pinch points?
   f) Are all cable connections to the control module in place? Are the connectors fully engaged?
   g) Are any of the connectors damaged?
   h) Are the wires within the connectors attached to the pins? Each wire may have to be tugged lightly to check if the wire is still crimped to the pin.

2. POST-INSPECTION:
   a) If improper or loose connections are found, reconnect them firmly (unless a loose wire has been found). Plug the power supply AC cord into a live wall socket and operate the unit through all functions.
   b) If the handheld pendant or wire is damaged, notify Graham-Field so that a handheld pendant can be sent for replacement.
   c) If damage to any other electrical cable or component, or disconnected wires are found, please notify Graham-Field.

3. ACTIONS:
   a) If full operation is restored, please advise Graham-Field of your successful outcome.
   b) If the fault cannot be corrected by simple re-connection, please inform Graham-Field of the results of your inspection in detail so that we may determine the appropriate action to be taken.

If you have any questions about the setup and / or operation of the Heat and Massage / Heat Only Unit, call the Graham-Field Technical Support Group at 1.770.368.4700.

USB Instruction:

FR601E includes one USB-A port (up to 18W) and one USB-C port (up to 30W) used for charging USB Models: Series FR601EPNNBN / FR601EPNHBN / FR601EPNOBN / FR601EPCNBN / FR601EPCHBN / FR601EPCOBN / FR601EUNNBN / FR601EUNHBN / FR601EUNOBN / FR601EUCNBN / FR601EUCHBN / FR601EUCOBN. USB Ports are located on the outside of the right arm.

1. Slide the protective flap covering the USB Ports to either side.
2. Plug the Type-A USB connector into the USB-A port (bottom port), or plug the Type-C USB connector into the USB-C port (top port).
3. Plug the opposite end of your USB cable into your device.

⚠ **WARNING: The USB-C output is rated for a maximum 12 volts and 2.25 amps**

⚠ **WARNING: The USB-A output is rated for a maximum 9 volts and 2 amps**

⚠ **WARNING: The USB-A and C output when used at the same time is rated for a maximum 5 volts and 4 amps shared.**

CARE AND MAINTENANCE

⚠ **WARNING: Inspect all components periodically and replace as needed.**

EVERY THREE MONTHS

- Check and clean casters.
- Tighten bolts in each leg that secure caster into frame.
- Check caster brakes.
- Check and clean lock recline mechanism.
- Check recliner mechanism for operation in all positions, including Trendelenburg Position, with assistant seated in recliner.

UPHOLSTERY MAINTENANCE AND STAIN REMOVAL

We recommend cleaning at least once a week to extend the lifespan of the upholstery. This prevents dirt and other contaminants from building up and stains from becoming permanent. If there is a spill, wipe off any excess right away with a dry cloth, making sure not to spread it all over the surface.

- Clean the whole surface in circular motions using liquid hand soap (pH neutral) and water (1 part soap to 9 parts water). Wipe with a clean damp cloth to get rid of any excess soap.
- Repeat as needed and then let dry.

For Guardian, Patriot Plus, Renaissance and Savoy fabrics only
If there is any build-up that can't be removed with soapy water, then use this as a last resort. Mixture: 1 part isopropyl alcohol to 1 part water.

Info: *Using alcohol on a regular basis can affect the properties of the product.*

• Once a month, you can use a soft-bristle brush for a deeper cleaning.

Info: *Light colors need more care, more often.*

Info: *The cleaning products recommended were used in a laboratory setting. Spradling Group® has no relationship with the manufacturers of those cleaning products.*

Color Transfer
Certain clothing and accessory dyes (such as those used on denim jeans) may migrate to lighter colors. This phenomenon is increased by humidity and temperature and is irreversible.
Check compatibility when using this product in combination with painted or varnished surfaces.

Disinfectants
In addition to cleaning, healthcare facilities maintain disinfecting regimens to reduce the spread of infections. There is a wide variety of available biocides that include bleaches, peroxides and quaternary ammonium products, among others. They should always be used at the recommended dilution, never in concentrated form. To prolong the life of coated fabrics, the disinfectants should be rinsed off after each use.

Info: *Misuse of disinfectants is the major source of surface deterioration. Spradling International, Inc.® continually evaluates cleaners/disinfectants, and a list of those tested can be found on their website.*

Abrasion test results exceeding ACT Performance Guidelines are not an indicator of product lifespan. Multiple factors affect fabric durability and appearance retention.

This information is not a guarantee and does not relieve the user from the responsibility of the proper and safe use of the product and all cleaning agents. The use of certain agents can be harmful to the surface appearance and lifespan of vinyl. Spradling, its agents, and assignees assume no responsibility resulting from the use of such cleaning agents to the vinyl.

Check compatibility when using this product in combination with painted or varnished surfaces.

Spradling Group® and Spradling International, Inc.® are registered trademarks of Spradling Holdings, Inc.

CDC RECOMMENDATIONS
CLEANING AND DISINFECTING STRATEGIES FOR ENVIRONMENTAL SURFACES IN PATIENT-CARE AREAS FOR VINYL UPHOLSTERY, WALL COVERINGS AND FLOORING

- Select EPA-registered disinfectants, if available, and use them in accordance with the manufacturer's instructions.
- DO NOT use high-level disinfectants / liquid chemical sterilants for disinfection of either noncritical instruments and devices or any environmental surfaces; such use is counter to label instructions for these toxic chemicals.
- Follow manufacturers' instructions for cleaning and maintaining noncritical medical equipment.
- In the absence of a manufacturer's cleaning instructions, follow certain procedures:
  - Clean noncritical medical equipment surfaces with a detergent / disinfectant.
  - DO NOT use alcohol to disinfect large environmental surfaces.
  - Use barrier protective coverings as appropriate for noncritical surfaces that are:
    - Touched frequently with gloved hands during the delivery of patient care.
    - Likely to become contaminated with blood or body substances.
    - Difficult to clean (e.g., computer keyboards).
- Keep housekeeping surfaces (e.g., floors, walls, tabletops) visibly clean on a regular basis and clean up spills promptly.
- Use a one-step process and an EPA-registered hospital detergent / disinfectant designed for general housekeeping purposes in patient-care areas where:
  - Uncertainty exists as to the nature of the soil on the surfaces (whether it is blood or body fluid or just normal dust or dirt).
  - Uncertainty exists regarding the presence of multi drug resistant organisms on such surfaces.
- Detergent and water are adequate for cleaning surfaces in non patient-care areas (e.g., administrative offices). Clean and disinfect high-touch surfaces on a more frequent schedule than minimal-touch housekeeping surfaces. Clean walls, blinds, and window curtains in patient-care areas when they are visibly dusty or soiled.
- DO NOT perform disinfectant fogging in patient-care areas.
- Avoid large-surface cleaning methods that produce mists or aerosols, or disperse dust in patient-care areas.
- Follow proper procedures for effective uses of mops, cloths, and solutions.
  - Prepare cleaning solutions daily or as needed, and replace with fresh solution frequently according to facility policies and procedures.
  - Change the mop head at the beginning of each day and also as required by facility policy, or after cleaning up large spills of blood or other body substances.
  - Clean mops and cloths after use and allow to dry before reuse; or use single-use, disposable mop heads and cloths.
- When performing low- or intermediate-level disinfection of environmental surfaces in nurseries and neonatal units, avoid unnecessary exposure of neonates to disinfectant residues on these surfaces by using EPA-registered germicides in accordance with manufacturers' instructions and safety advisories.

TECHNICAL SPECIFICATIONS

Clinical Care Recliner Series FR601E Models			
Recliner Specifications			Tolerance ± inches (cm)
Overall Height		50" (129.5 cm)	1" (2.54 cm)
Overall Width	**Central Locking**	35" (88.9 cm)	0.5" (1.27 cm)
	Non-Central Locking	33" (83.8 cm)	0.5" (1.27 cm)
Overall Depth		42" (106.6 cm)	1" (2.54 cm)
Width Between Arms		24" (60.9 cm)	0.5" (1.27 cm)
Arm Height from Floor (Fully Upholstered)		28.5" (71.1 cm)	0.5" (1.27 cm)
Arm Height from Floor (Urethane Arm Caps)		29.5" (74.9 cm)	0.5" (1.27 cm)
Back Height from Seat		29" (73.7 cm)	2" (5.08 cm)
Seat Height		24" (60.9 cm)	0.5" (1.27 cm)
Seat Width		23" (58.42 cm)	0.5" (1.27 cm)
Seat Depth		18" (48.3 cm)	0.5" (1.27 cm)
Depth Fully Reclined in Trendelenburg		72" (177.8 cm)	1" (2.54 cm)
Width (Both Side Tables in Upright Position)		53.5" (135.8 cm)	0.5" (1.27 cm)
Maximum Weight Capacity		500 lb (226.8 kg), EVENLY DISTRIBUTED	

ELECTRICAL SPECIFICATIONS

Input Voltage	100-240 V~, 50/60Hz
Input Current	420 VA
Duty Cycle	10%, MAX 2 min./18 min.

USB SYSTEM SPECIFICATIONS

Operating Voltage		12VDC - 29VDC
Required Amp at Operating Voltage		1.67A minimum
Electrostatic Discharge (ESD)		15KV (Contact) 25KV (Air)
Industry Compliance Standard		IEC 60601-1
Ambient Operating Temperature Range		+5° to +55° C
Relative Humidity		10% to 80%
USB Charging Output	**USB-A**	5VDC/3A MAX, 9VDC/2A MAX
	USB-C	5VDC/3A MAX, 9VDC/2A MAX, 12VDC/2.25A MAX
	USB-A & C	5VDC/4A MAX SHARED

For complete technical specifications, call the Graham-Field Technical Support Group at 1.770.368.4700.

DISPOSAL AND KEY TO SYMBOLS

DISPOSAL

Lumex Recliner equipment and accessories can be disposed of.

We recommend disassembling and dividing the equipment and components into different waste groups such as: metal, cable, electronic, recoverable resource and plastic for recycling or combustion.

Most plastic components are provided with a plastic types code and fiber content to aid sorting of plastic parts.

	RECYCLING			
Model #	**Metal Scrap**	**Cable Scrap**	**Electronic Scrap**	**Plastic Recycling or Combustion**
FR601E Series (all models)	X	X	X	X

KEY TO SYMBOLS

The following symbols are used on Lumex Recliner product labels.

	MANUFACTURER
	CAUTION
UDI	UNIQUE DEVICE IDENTIFIER
	GENERAL WARNING SIGN
	ELECTRICAL AND ELECTRONIC EQUIPMENT
MD	MEDICAL DEVICE
SN	SERIAL NUMBER

TROUBLESHOOTING GUIDE

TROUBLESHOOTING

⚠ **DANGER: SHOCK HAZARD — To reduce the risk of electric shock, unit is to be serviced by qualified service personnel ONLY.**

⚠ **DANGER: SHOCK HAZARD — ALWAYS disconnect the power source whenever troubleshooting or servicing any electric powered recliner.**

The following list of problems and their solutions will assist you in determining what may be causing your recliner not to function as designed.

If	Then
Nothing moves	**STEP 1:** Ensure the recliner is connected to power and the green indicator light on the top of the power supply is on. **STEP 2:** Ensure the batteries in the hand pendant are charged. If the batteries are discharged, they need to be replaced. **STEP 3:** Plug unit into a mains supply wall receptacle and observe the control box LED: • If the control box LED is off, the system is only running on battery backup. • If the control box LED illuminates, yellow when the pendant is not activated, then contact Graham-Field Technical Support.
The unit runs when plugged into the wall receptacle, but does not run on backup battery.	Plug unit into wall receptacle overnight. If the battery does not hold a charge, replace the battery.
A single function of the recliner doesn't work	Ensure all cable connections are firmly attached.
Hand pendant doesn't work	Replace the battery in the wireless controls by opening the back cover and installing a new battery.
Audible beeping error signal is heard, nothing moves	A function that is faulty will cause the Control Box to beep intermittently when the faulty function's Hand Control Pendant button is depressed. **Step 1:** Simultaneously press and hold the Recline Position and Seated Position buttons (the Control Box should start beeping) for approximately five seconds until beeping stops. **Step 2:** Reinitialize the motors by fully reclining the recliner using the Recline Position button. **Note:** *If an audible error beep occurs again during reset of a function or while checking functionality, the function that initiated the beep is faulty. Contact Graham-Field Technical Support if this occurs.* **Step 3:** Check the recline functionality.
Unusual sounds or uneven movement during operation	Stop the actuator system immediately if anything unusual is observed. Check for any obstructions.
Unusual noises or electrical smells	Switch off the mains voltage immediately and the external battery, if any. Call GF Health Products, Inc. Representative at 1.770.368.4700
USB light not on	Check the USB connector is plugged into the HEAT & MASSAGE Control Box. Ensure that the HEAT & MASSAGE Control Box is plugged into the Y-Connector of the LINAK power recliner Control Box.

⚠ **WARNING: The recliner electronic system contains no serviceable parts. DO NOT open the motors, cables, or pendant hand control. ONLY a Graham-Field authorized distributor or factory-trained personnel may perform service or adjustments on these components.**

GF Health Products, Inc. may be contacted at 1.770.368.4700 for additional information required to service or repair the equipment.

BATTERY REPLACEMENT

⚠ **DANGER: SHOCK HAZARD — To reduce the risk of electric shock, unit is to be serviced by qualified service personnel ONLY.**

⚠ **DANGER: SHOCK HAZARD — ALWAYS disconnect the power source whenever troubleshooting or servicing this recliner.**

Info: *The recliner utilizes unique batteries specific to this unit. To order, contact Graham-Field Customer Service at 1.770.368.4700.*

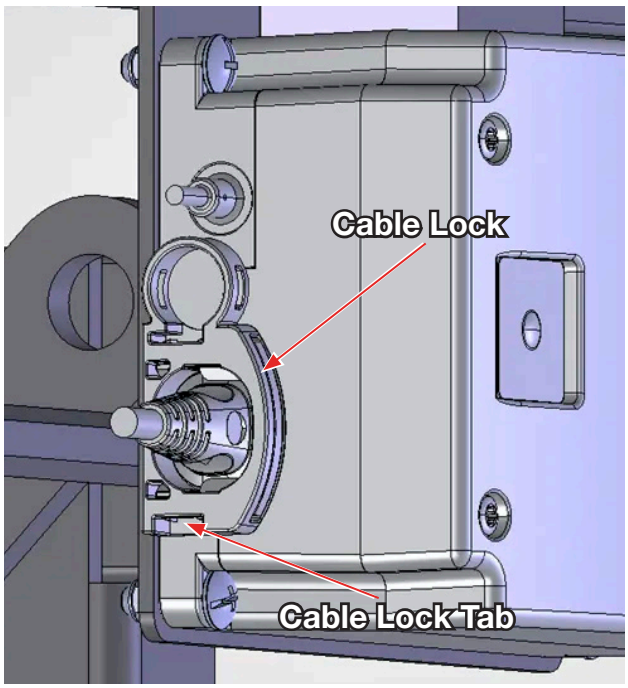

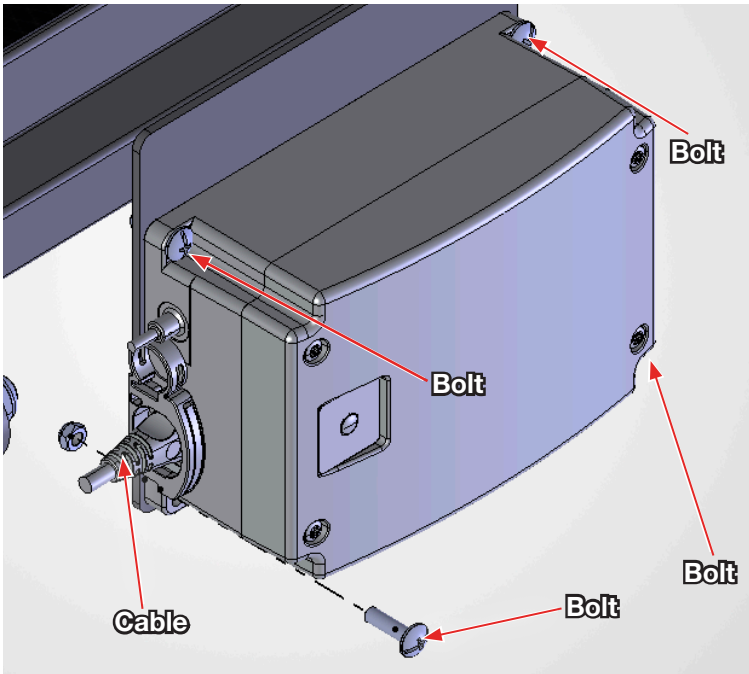

1. Release the battery cable lock using a flat-head screwdriver to depress the cable lock tab until the Cable Lock pops free.
2. Remove the cable from the battery.
3. Unscrew the 4 outer bolts attaching the battery to the frame (Figure above).

Note: DO NOT unscrew the 4 screws on the front of the battery housing cover.

4. Replace the battery with a new one.
5. To re-install the battery, repeat previous steps in reverse order.

PREVENTIVE MAINTENANCE SCHEDULE

IMPORTANT: Follow each step in the order shown in these instructions.

Component	Cleaning Procedure	Schedule	Cleaning Agent *	Special Notes
UPHOLSTERED COMPONENTS	*SEE UPHOLSTERY CLEANING SECTION	AFTER EACH USE	ROUTINE HOSPITAL GRADE DISINFECTANTS, SOAP AND WATER	USE ONLY MEDIUM STRENGTH CLEANERS DO NOT STEAM CLEAN OR PRESSURE WASH
RECLINER	WIPE WITH DAMP CLOTH TO REMOVE ANY FOREIGN MATERIAL		ROUTINE HOSPITAL GRADE DISINFECTANTS, SOAP AND WATER	LUBRICATE PIVOT POINTS AFTER CLEANING
HAND PENDANT	WASH WITH DAMP CLOTH TO REMOVE ANY FOREIGN MATERIAL		ROUTINE HOSPITAL GRADE DISINFECTANTS, SOAP AND WATER	CHECK THE HAND PENDANT FOR DAMAGE AND HOLES CAUSED BY VIOLENT HANDLING BEFORE WASHING
ELECTRICAL COMPONENTS	WIPE EXTERNAL SURFACES ONLY WITH DAMP CLOTH TO REMOVE ANY FOREIGN MATERIAL		ROUTINE HOSPITAL GRADE DISINFECTANTS, SOAP AND WATER	USE ONLY MEDIUM STRENGTH CLEANERS
MECHANICAL RECLINER COMPONENTS	WIPE WITH DAMP CLOTH TO REMOVE ANY FOREIGN MATERIAL		ROUTINE HOSPITAL GRADE DISINFECTANTS, SOAP AND WATER	
MECHANICAL ACCESSORIES	WIPE WITH DAMP CLOTH TO REMOVE ANY FOREIGN MATERIAL		ROUTINE HOSPITAL GRADE DISINFECTANTS, SOAP AND WATER	

Procedure	Schedule	Material
LUBRICATE ALL ACTUATOR MOUNTING PINS AND MECHANISM JOINTS/PINS	EVERY 6 MONTHS	LITHIUM-BASED GREASE
⚠ **NEVER LUBRICATE MOTOR** ⚠		
INSPECT ALL FASTENERS TO ENSURE PROPER FIT, POSITION AND TIGHTNESS, INCLUDING NUTS, BOLTS, ETC.	EVERY 3 MONTHS	PROPER SIZE WRENCH AND SCREWDRIVER
INSPECT ALL SURFACES AND REMOVE ANY SHARP OR BURRED AREAS; APPLY TOUCH-UP PAINT WHERE REQUIRED		METAL FILE, PROPER COLOR PAINT (SPECIFY COLOR WHEN ORDERING)

* Disinfecting and Cleaning Upholstery - ALWAYS follow manufacturer's recommended dilution	
DISINFECTANTS FOR VINYL PRODUCTS	PHENOLIC DISINFECTANTS ARE THE BEST CHOICE FOR VINYL
	PROPERLY DILUTED QUATERNARIES ARE ALSO ACCEPTABLE FOR VINYL
	QUATERNARY / ISOPROPYL DISINFECTANTS ARE NOT RECOMMENDED FOR VINYL
DISINFECTANTS FOR URETHANE PRODUCTS (STANDARD UPHOLSTERY)	QUATERNARY DISINFECTANTS ARE RECOMMENDED FOR URETHANE
	QUATERNARY / ISOPROPYL DISINFECTANTS ARE RECOMMENDED FOR URETHANE
	PHENOLICS SHOULD BE AVOIDED ON URETHANE
DISINFECTANTS FOR ALL PRODUCTS	ALL FABRICS MAY BE CLEANED WITH A 1:10 DILUTION OF HOUSEHOLD BLEACHES CONTAINING 5.25% SODIUM HYPOCHLORITE AS RECOMMENDED BY THE CENTERS FOR DISEASE CONTROL IN ATLANTA, GEORGIA; THERE IS NO HARMFUL EFFECT ON THE FABRIC
	DISINFECTANTS APPLIED AT FULL CONCENTRATION OR IN HIGHLY CONCENTRATED SOLUTIONS WILL DECREASE THE USEFUL LIFE OF FABRIC
	IODOPHOR-TYPE DISINFECTANTS USED ON FABRIC MAY RESULT IN STAINING
SOILS OR STAINS	USE NEUTRAL SOAPSUDS AND LUKEWARM WATER; DO NOT USE HARSH CLEANSERS, SOLVENTS OR DETERGENTS
HARD-TO-CLEAN SPOTS	USE STANDARD HOUSEHOLD / VINYL CLEANSERS AND A SOFT BRISTLE BRUSH ON TROUBLESOME SPOTS OR STAINS; PRESOAK HEAVY, DRIED-ON SOIL
LAUNDERING	LAUNDERING VINYL-LAMINATED, POLYURETHANE-COATED, OR RUBBER-COATED FABRIC IS NOT RECOMMENDED; LAUNDERING MAY SUBSTANTIALLY DECREASE THE USEFUL LIFE OF THE FABRIC

▲ **NOTICE: POSSIBLE EQUIPMENT DAMAGE HAZARD: Steam cleaning and pressure washing of recliner is not recommended and can void warranty.**

Info: *GF Health Products, Inc. offers customized Preventative Maintenance Service Programs for Lumex products; contact your GF sales representative for further information.*

LIMITED WARRANTY

SCOPE OF WARRANTY

GF Health Products, Inc. ("GF") warrants to the Original Purchaser only that it will replace or repair components, at GF's sole discretion, that are defective in material or workmanship under normal use and service. All warranties are conditioned upon the proper use of the products strictly in accordance with good commercial practice and applicable GF instructions and manuals, including proper use and maintenance. To the extent that a third party warrants a component, GF conveys all of its rights under that warranty to the Original Purchaser, to the extent permitted. Original Purchaser is one who purchases this product new and unused from GF or a Certified GF Dealer/Distributor. This limited warranty shall only apply to defects that are reported in accordance with the provisions set forth in this warranty document, within the applicable warranty period and which, upon examination by GF or its authorized representative, prove to be a warranty item. (See Obtaining Warranty Service below).

This limited warranty is not transferable.

The warranted components and time period are set forth below:

Frame:.....five (5) years
Heat and Massage Unit: .....two (2) years
Heat Only Unit:.....two (2) years
Casters:.....one (1) year
Recline Mechanism: .....two (2) years
Battery Backup:.....four (4) years
Actuator: .....four (4) years
Control Box:.....four (4) years
USB Components: .....one (1) year
Upholstered Components:.....one (1) year
Replacement Parts‡‡.....90 (ninety) Days

* Labor is not included in the warranty.

‡ The warranty period is as designated above. If a part is replaced under warranty, the original warranty period will not be affected. All other replacement parts will be subject to the warranty period specified.

The applicable warranty period shall commence from date of shipment to the Original Purchaser, unless there is an expiration date on the component in which case the warranty shall expire on the earlier of warranty period or the expiration date.

OBTAINING WARRANTY SERVICE

Contact the Dealer/Distributor from whom the product was purchased. If there is not a Dealer/Distributor, you must contact GF directly by calling (770) 368-4700, or by e-mailing a request to cs@grahamfield.com. The Customer Service Representative will provide specific directions. Failure to abide by the specific directions will result in denial of the warranty claim.

The warranty does not cover and GF shall not be liable for the following:

1. Defects, damage, or other conditions caused, in whole or in part, by misuse, abuse, negligence, alteration, accident, freight damage, tampering or failure to seek and obtain repair or replacement in a timely manner;
2. Products which are not installed, used, or properly cleaned and maintained as required in the official manual for the applicable product;
3. Products considered to be of a non-durable nature including, but not limited to: filters, fuses, gaskets, lubricants, and charts;
4. Accessories or parts not provided by GF;
5. Matching of color, grain or texture except to commercially acceptable standards;
6. Changes in color caused by natural or artificial light:
7. Charges by anyone for adjustments, repairs, replacement parts, installation or other work performed upon or in connection with such products which are not expressly authorized in writing, in advance, by GF;
8. Any labor or shipping charges incurred in the replacement part installation or repair;
9. Costs and expenses of regular maintenance and cleaning; and
10. Representations and warranties made by any person or entity other than GF.

ENTIRE WARRANTY, EXCLUSIVE REMEDY AND CONSEQUENTIAL DAMAGES DISCLAIMER

TO THE GREATEST EXTENT PERMITTED BY LAW, THIS WARRANTY IS GF'S ONLY WARRANTY AND IS IN LIEU OF ALL OTHER WARRANTIES, EXPRESS OR IMPLIED. EXCEPT IN CASES WHERE IMPLIED WARRANTIES MAY NOT BE VALIDLY WAIVED, GF MAKES NO IMPLIED WARRANTIES OF ANY KIND INCLUDING ANY IMPLIED WARRANTIES OF MERCHANTABILITY OR FITNESS FOR A PARTICULAR PURPOSE. IF ANY MODEL OR SAMPLE WAS SHOWN TO THE CUSTOMER, SUCH MODEL OR SAMPLE WAS USED MERELY TO ILLUSTRATE THE GENERAL TYPE AND QUALITY OF THE PRODUCT AND NOT TO REPRESENT THAT THE PRODUCT WOULD NECESSARILY CONFORM TO THE MODEL OR SAMPLE IN ALL RESPECTS. THIS WARRANTY IS LIMITED TO THE REPAIR OR REPLACEMENT OF THE DEFECTIVE PARTS. GF SHALL NOT BE LIABLE FOR AND HEREBY DISCLAIMS ANY DIRECT, SPECIAL, INDIRECT, INCIDENTAL, EXEMPLARY OR CONSEQUENTIAL DAMAGES, INCLUDING, BUT NOT LIMITED TO: DAMAGES FOR LOSS OF PROFITS OR INCOME, LOSS OF USE, DOWNTIME, COVER, OR EMPLOYEE OR INDEPENDENT CONTRACTOR WAGES, PAYMENTS AND BENEFITS. CERTAIN STATES AND COUNTRIES MAY CONFER ADDITIONAL RIGHTS REGARDING WARRANTIES AND IN THOSE INSTANCES, GF'S LIABILITY AND THE LIABILITY OF GF'S SUPPLIERS, SHALL BE LIMITED TO THE FULLEST EXTENT PERMITTED BY LAW.

The warranties contained herein, together with GF's current Terms and Conditions, contain all the representations and warranties with respect to the subject matter of this document, and supersede all prior negotiations, agreements and understandings with respect thereto. The recipient of this document hereby acknowledges and represents that it has not relied on any representation, assertion, guarantee, warranty, collateral contract or other assurance, except those set out in this document.

For additional information on this product or this warranty, please contact a GF Customer Service Representative.

NOTES:

1. Additional terms and conditions may apply. See GF's General Terms and Conditions on its website: www.grahamfield.com.
2. Freight claims must be notated on the appropriate shipping documents and must be made with immediacy. International, federal and state regulations govern specific requirements for freight claims. Failure to abide by those regulations may result in a denial of the freight claim. GF will assist you in filing the freight claim.
3. Claims for any short shipment must be made within three (3) days of the invoice date.

INDEX

A
Alarm, low battery 7
Assembly 6

B
Battery replacement, hand pendant 10
Battery replacement, recliner 24
Bluetooth pairing, hand pendant 10

C
Care and maintenance 19
Caster operation 8
Casters, central locking system 8
Casters, directional (swivel) 8
Casters, locking 8
CAUTION statement, significance 3
CDC recommendations 20

D
Disposal 22

E
Electromagnetic compatibility (EMC) 5
Electrical control locations 7
Electrical specifications 21

F
Footplate operation 11

H
Hand pendant 10
Hand pendant, operation 10
Hand pendant, pairing Bluetooth 10
Heat and massage / heat only, installation and operating guide 13
Heat and massage / heat only / USB installation instructions 15
Heat and massage / heat only operation 16
Heat and massage / heat only troubleshooting guide 17

I
Important safety precautions 3
Info statement, significance 3
Intended use 3
Introduction 3

K
Key to symbols 22

L
Location, backup battery 7
Location, hand pendant 7
Location, power cord 7
Location, trendelenburg hand trigger 9
Limited warranty 26

N
NOTICE statement, significance 3

O
Operation, hand pendant 10
Operation, pivot-arm 12
Operation, tente casters 8
Operation, recliner 9

P
Pivot-arm operation 12
Pivot-arm, close 12
Pivot-arm, open 12
Preventive Maintenance Schedule 25
Product description 6

R
Recliner operation 9

S
Side table operation 11
Side table, lower 11
Side table, raise 11
Symbol key 22

T
Technical specifications 21
Trendelenburg (shock) position 9
Troubleshooting Guide 23

U
Unpacking 6
Upholstered back assembly 7
Upholstery maintenance and stain removal 19
Upholstery maintenance: CDC recommendations 20
Upholstery maintenance: disinfectants 19
Upholstery maintenance for Guardian, Patriot Plus, Renaissance and Savoy fabrics 19
USB only, installation 15
USB only, operation 18
USB system specifications 21

W
WARNINGS 4
WARNING statement, significance 3
Warranty, limited 26

LUMEX®
by graham-field

Proudly designed, engineered, and assembled in the USA of domestic and globally sourced components.

Manufactured By:
GF Health Products, Inc.
1 Graham Field Way, Atlanta, GA 30340
Made in USA

© 2026, GF Health Products, Inc. All Rights Reserved.
Lumex is a registered trademark of GF Health Products, Inc.

LX_FR601E-INS-LAB-RevA26

+1 770.368.4700

Information contained herein is subject to change without notice.
The most current and complete product information can be found on our website.

www.grahamfield.com

graham field™