LUMEX®

by graham-field

Series FR601P Clinical Care Recliner with Pivot-Arm and Upholstered Arms
Series FR601PH Clinical Care Recliner with Pivot-Arm, Upholstered Arms, and Heat and Massage
Series FR601PHO Clinical Care Recliner with Pivot-Arm, Upholstered Arms, and Heat Only
Series FR601U Clinical Care Recliner with Pivot-Arm and Urethane Arms
Series FR601UH Clinical Care Recliner with Pivot-Arm, Urethane Arms, and Heat and Massage
Series FR601UHO Clinical Care Recliner with Pivot-Arm, Urethane Arms, and Heat Only
Series FR601PL Clinical Care Recliner with Pivot-Arm, Upholstered Arms, and Extended Legrest
Series FR601PHL Clinical Care Recliner with Pivot-Arm, Upholstered Arms, Heat and Massage, and Extended Legrest
Series FR601PHOL Clinical Care Recliner with Pivot-Arm, Upholstered Arms, Heat Only, and Extended Legrest
Series FR601UL Clinical Care Recliner with Pivot-Arm, Urethane Arms, and Extended Legrest
Series FR601UHL Clinical Care Recliner with Pivot-Arm, Urethane Arms, Heat and Massage, and Extended Legrest
Series FR601UHOL Clinical Care Recliner with Pivot-Arm, Urethane Arms, Heat Only, and Extended Legrest

ASSEMBLY AND OPERATING INSTRUCTIONS

SAVE THIS MANUAL FOR FUTURE USE.

LX_FR601-INS-LAB-RevE22

CONTENTS

INTRODUCTION 3
INTENDED USE 3
IMPORTANT SAFETY PRECAUTIONS—PLEASE READ BEFORE USE 3
WARNINGS 3

ASSEMBLY 5
UNPACKING 5
PRODUCT DESCRIPTION 5
UPHOLSTERED BACK ASSEMBLY, ALL MODELS 6

OPERATION 7
TENTE® CASTERS 7
MODELS FR601P / FR601PH / FR601PHO / FR601U / FR601UH / FR601UHO 7
MODELS FR601PL, FR601PHL, FR601PHOL, FR601UL, FR601UHL, FR601UHOL WITH EXTENDED LEGREST 7
SIDE TABLE OPERATION 8
RAISE SIDE TABLE 8
LOWER SIDE TABLE 8
RECLINER OPERATION 8
FIRST POSITION (UPRIGHT POSITION) 8
SECOND POSITION (FIRST RECLINE POSITION) 8
THIRD POSITION (SECOND RECLINE POSITION) 9
TRENDELENBURG POSITION (ALSO KNOWN AS SHOCK POSITION) 9
PIVOT-ARM OPERATION 10
OPEN THE PIVOT-ARM 10
CLOSE THE PIVOT-ARM: 10
FOOTPLATE OPERATION 11

RECLINERS WITH HEAT AND MASSAGE OR HEAT ONLY FEATURE 12
INSTALLATION AND OPERATING GUIDE 12
DESCRIPTION 12
CONNECTION 12
MAIN COMPONENTS 12
HEAT AND MASSAGE / HEAT ONLY INSTALLATION INSTRUCTIONS 13
HEAT AND MASSAGE / HEAT ONLY UNIT OPERATION INSTRUCTIONS 15
HEAT AND MASSAGE / HEAT ONLY UNIT TROUBLESHOOTING GUIDE 17

CARE AND MAINTENANCE 17
EVERY THREE MONTHS 17
UPHOLSTERY MAINTENANCE AND STAIN REMOVAL 17
FOR GUARDIAN, PATRIOT PLUS, RENAISSANCE AND SAVOY FABRICS ONLY 18
COLOR TRANSFER 18
DISINFECTANTS 18
CDC RECOMMENDATIONS 18

TECHNICAL SPECIFICATIONS 19

DISPOSAL AND KEY TO SYMBOLS 20
DISPOSAL 20
KEY TO SYMBOLS 20
CE CERTIFICATION 21

LIMITED WARRANTY 22

INDEX 23

INTRODUCTION

This manual contains assembly, operation, and maintenance instructions for the Lumex Clinical Care Recliner Series FR601 (Models FR601P, FR601PH, FR601PHO, FR601U, FR601UH, FR601UHO, FR601PL, FR601PHL, FR601PHOL, FR601UL, FR601UHL, and FR601UHOL). Read the entire manual carefully before using your recliner, and refer to it during use if you have questions. If you have further questions, call Graham-Field / Lumex Technical Support at 1.770.368.4700.

INTENDED USE

Lumex Clinical Care Recliners are intended to make the care, treatment and recovery of patients easier and more comfortable. Lumex Clinical Care Recliners are used in a wide range of healthcare applications including Dialysis, Oncology, Drug Delivery, Same Day Surgery and Post-Operative Recovery. Lumex Clinical Care Recliners are ideal for use in hospitals, clinics and rehabilitation centers.

The Lumex Series FR601 Clinical Care Recliner supports patient weights up to 400 lb (181.4 kg), EVENLY DISTRIBUTED.

IMPORTANT SAFETY PRECAUTIONS—PLEASE READ BEFORE USE

The safety statements presented in this chapter refer to the basic safety information that the Series FR601 Recliner user must pay attention to and abide by. There are additional safety statements in other chapters or sections, which may be the same as or similar to the following, or specific to the operations. Please note the following special statements, used throughout this manual, and their significance:

⚠ **WARNING: Indicates a potential hazard situation or unsafe practice that, if not avoided, could result in death or serious personal injury.**

⚠ **CAUTION: Indicates a potential hazard or unsafe practice that, if not avoided, could result in minor or moderate personal injury.**

▲ **NOTICE: Indicates a potential hazard or unsafe practice that, if not avoided, could result in product or property damage.**

Info: Provides application recommendations or other useful information to ensure that you get the most from your product.

WARNINGS

⚠ **WARNING: Read this entire manual before assembly or operation.**

⚠ **WARNING: Periodically inspect all parts and replace as needed.**

⚠ **WARNING: Do not use near an open flame, as the chair could be a combustion source, resulting in fire, property damage, and severe physical injury.**

⚠ **WARNING: The pivot-arm MUST NOT be used as a patient or caregiver support while open. The recliner may tip and become unstable if weight is placed on the pivot-arm when in the open position.**

⚠ **WARNING: Service and repair of the Lumex Series FR601 Pivot-Arm Clinical Care Recliner must be performed by a Graham-Field authorized distributor. GF Health Products, Inc. is not responsible for any consequence resulting from any unauthorized service or repair.**

⚠ **WARNING: This product has a maximum weight capacity of 400 lb (181.4 kg), EVENLY DISTRIBUTED.**

⚠ **WARNING: Casters must be locked at all times, except during transport.**

⚠ **WARNING: Unauthorized modification of your recliner or the use of non-Lumex replacement parts may change the structure of the recliner and could create a hazardous condition, which may result in serious injury and will void the warranty.**

⚠ **WARNING: This product can expose you to chemicals including Di(2-ethylhexyl)phthalate (DEHP) which is known to the State of California to cause cancer and birth defects or other reproductive harm. For more information go to www.p65warnings.ca.gov/furniture.**

⚠ **WARNING: GF Health Products, Inc. specifically disclaims responsibility for any bodily injury or property damage which may occur during any use which does not comply with federal, state or local laws or ordinances.**

ASSEMBLY

UNPACKING

1. Check for obvious damage to the carton or its contents. If damage is evident, notify the carrier and your Graham-Field authorized distributor.
2. Remove all packaging materials from recliner base.

PRODUCT DESCRIPTION

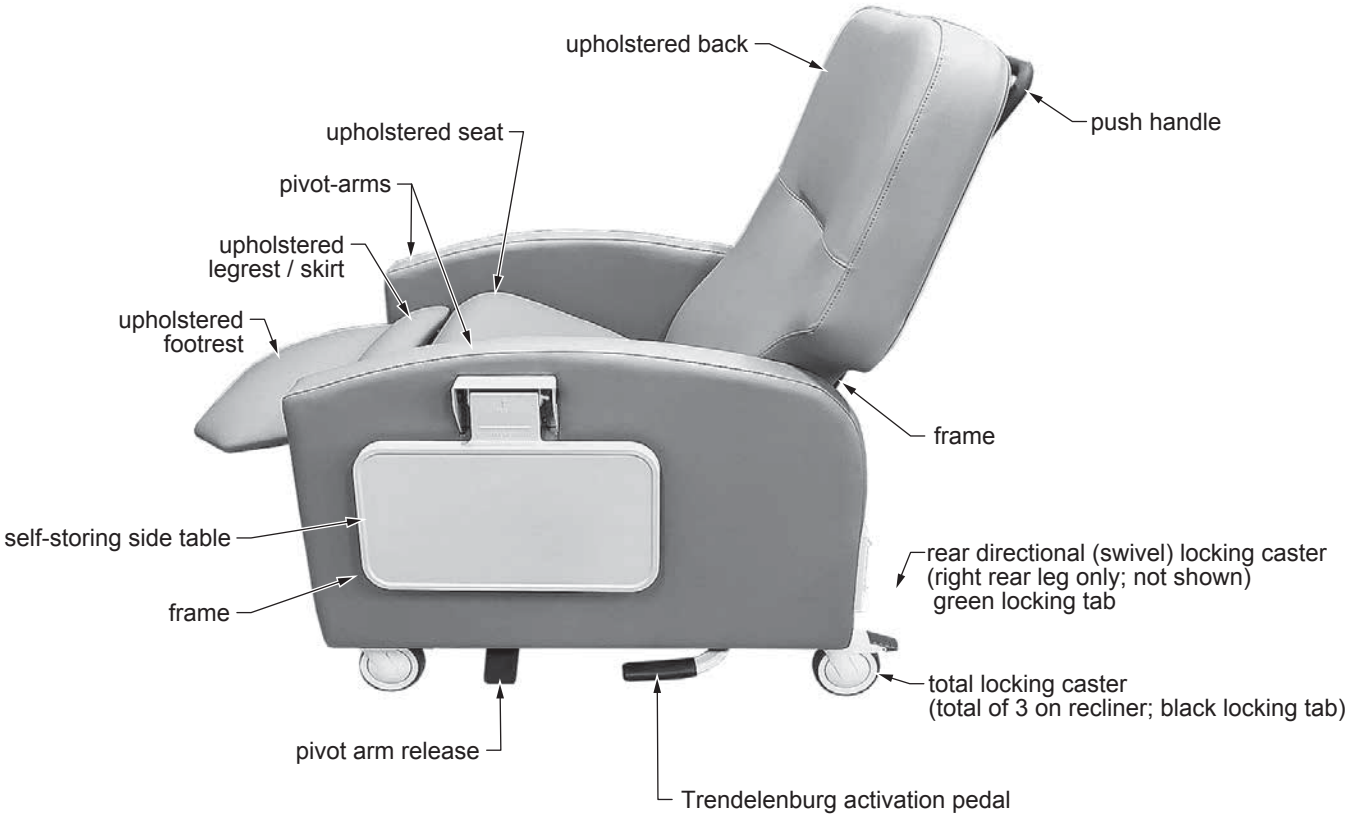

Series FR601 Clinical Care Recliner with Pivot-Arm Shown in First Recline Position

UPHOLSTERED BACK ASSEMBLY, ALL MODELS

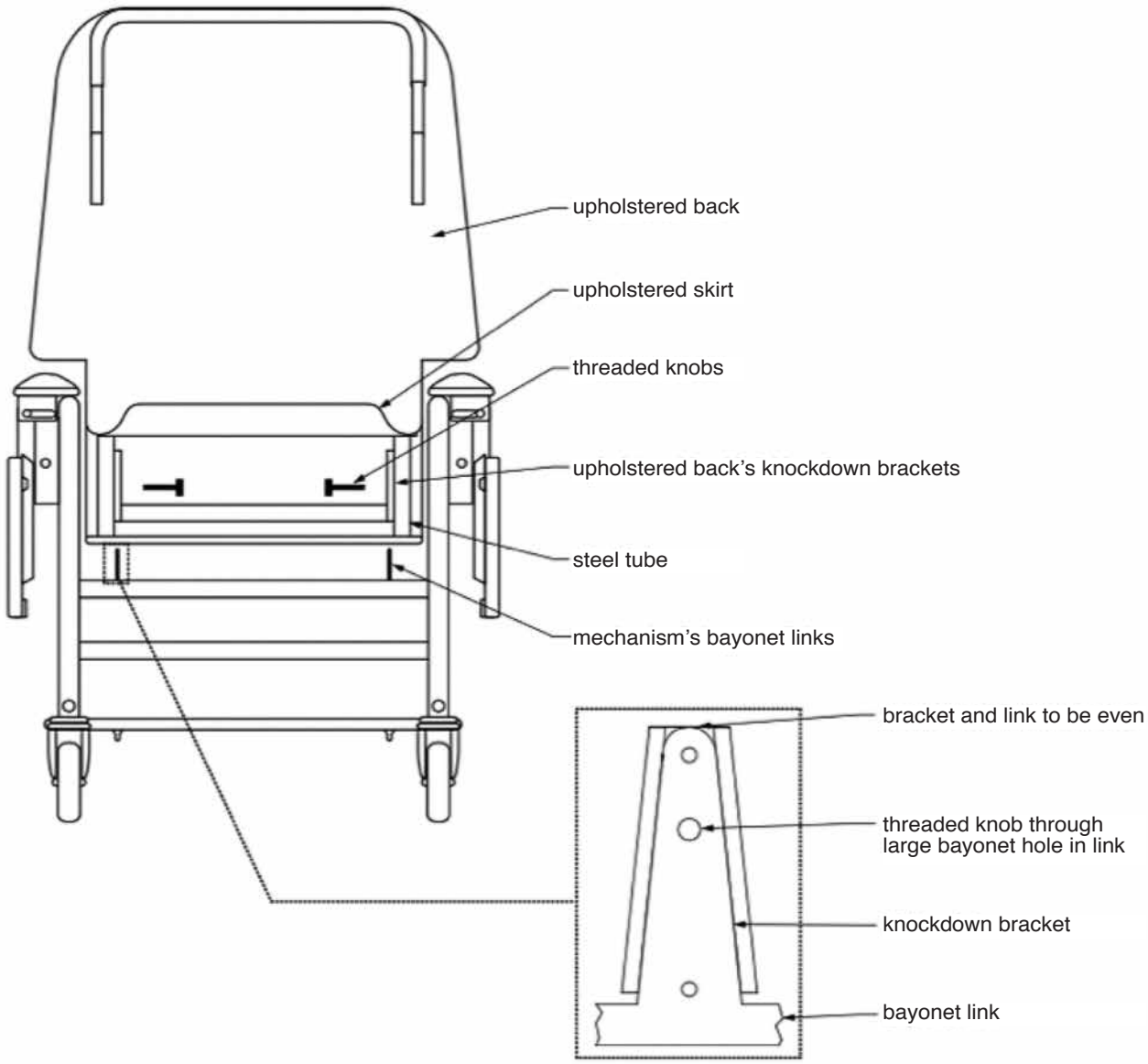

1. Lift the skirt on the rear of the upholstered back. To make assembly easier, hold skirt up with a small piece of tape to fully expose the knockdown brackets that are to be mated to the two bayonet lugs on the recliner mechanism.
2. Remove two pre-installed threaded knobs from back (one on each side).
3. Carefully guide the upholstered back onto the mechanism, inserting both bayonet links at the same time through the two cutouts located in the bottom of the back.
4. Push down firmly on the back until the recliner mechanism bayonet links are fully engaged in the upholstered back knockdown brackets. The top of bayonet link should be even with top of knockdown bracket, as shown above.
5. Once the back is properly seated on mechanism, insert the threaded knob through bayonet link, knockdown bracket and steel tube (one on each side). Secure hand tight.
6. Remove tape and lower upholstery skirt. Secure back skirt with the skirt hook and loop strips.

OPERATION

TENTE® CASTERS

⚠ **WARNING: Casters must be locked at all times EXCEPT during transport.**

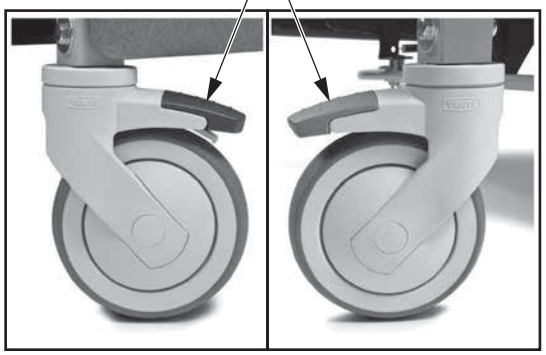

total locking caster | **directional (swivel) locking caster (right rear caster)**

All Lumex Clinical Care Recliners now feature the latest design, all-plastic casters from TENTE, shown at right. Specifically designed for use in healthcare environments, the new casters are easier to clean, easier to move, and tolerate a wide array of cleaners and chemicals. Each caster is made from high-grade synthetic materials and features a double-ball bearing swivel head. The wheel center is made of polypropylene and the tire tread of TENTEprene (thermoplastic rubber). The gray non-marking tires feature precision ball bearings.

Models FR601P / FR601PH / FR601PHO / FR601U / FR601UH / FR601UHO

Locking casters: These models feature three total locking casters, identified by black actuator tabs that lock both the wheel and the swivel. To activate the total lock, press down on the BLACK actuator tab until it locks. To release the total lock, press on the raised portion of the actuator tab until the lever is back in the normal operating position.

Directional (swivel) caster: The fourth caster ***only***, located on the right rear position of the recliner, is a directional (swivel) locking caster, identified by a green actuator tab. The directional lock caster locks in one of two 180-degree positions relative to the frame (forward and backward) and allows the recliner to track straight when pushed. To activate the directional lock, press down on the GREEN actuator tab until it locks — you may need to move the recliner slightly until the caster locks in a straight line with the recliner frame. To release the directional lock, press on the raised portion of the actuator tab until the lever is back in the normal operating position.

Models FR601PL, FR601PHL, FR601PHOL, FR601UL, FR601UHL, FR601UHOL with Extended Legrest

Locking (fixed) front casters: These models feature two front fixed locking casters, identified by black actuator tabs, that lock the wheel. To activate the lock, press down on the BLACK actuator tab until it locks. To release the lock, press on the raised portion of the actuator tab until the lever is back in the normal operating position.

Locking rear caster: These models feature one total locking caster, identified by a black actuator tab that locks both the wheel and the swivel. To activate the total lock, press down on the BLACK actuator tab until it locks. To release the total lock, press on the raised portion of the actuator tab until the lever is back in the normal operating position.

Directional (swivel) rear caster: The fourth caster ***only***, located on the right rear position of the recliner, is a directional (swivel) locking caster, identified by a green actuator tab. The directional lock caster locks in one of two 180-degree positions relative to the frame (forward and backward) and allows the recliner to track straight when pushed. To activate the directional lock, press down on the GREEN actuator tab until it locks — you may need to move the recliner slightly until the caster locks in a straight line with the recliner frame. To release the directional lock, press on the raised portion of the actuator tab until the lever is back in the normal operating position.

SIDE TABLE OPERATION

See illustration at right for side table operation.

Raise Side Table

Raise the side table all the way up and slide in toward the armrest until tabs engage slots in mount bracket. Press down lightly on table to ensure locking tabs are engaged.

Lower Side Table

Lift the side table up slightly until tabs disengage slots and pull table away from armrest. Lower side table to self-storing position.

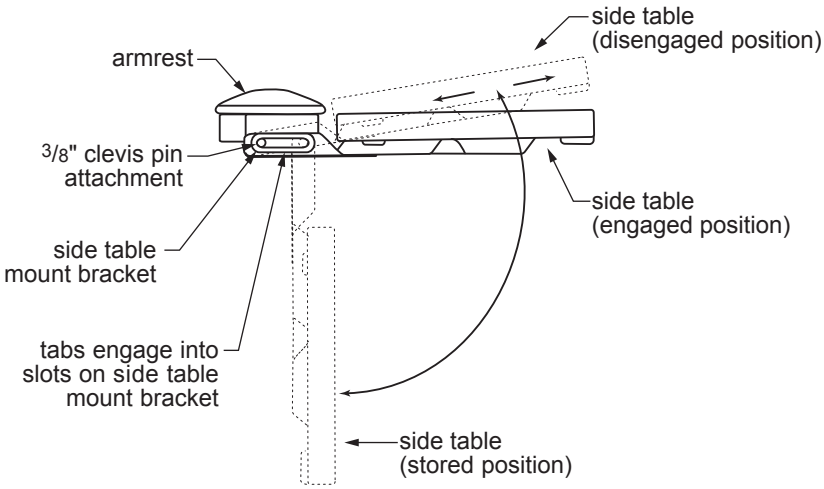

Side Table

RECLINER OPERATION

The Lumex Series FR601 Recliner features three positions for patient comfort. The fourth position is a Trendelenburg (or Shock) Position that must be activated by a caregiver. The Trendelenburg Position CANNOT be activated by a patient while in the recliner.

First Position (Upright Position)

The first position is the **Upright Position**. This position is ideal for patient transport and can be used to initiate patient treatment / therapy.

Upright Position

Second Position (First Recline Position)

The second position is the **First Recline Position** and is also known as the "TV" position. This position is ideal for patient treatment, rest and reading.

First Recline Position (TV Position)

To Achieve Second Position / First Recline Position:

- Reclining by patient: Place hands on armrests and push body against recliner back to recline yourself to desired position. To bring yourself up, place hands on armrests and pull yourself up while leaning your body forward, away from the recliner back, while at the same time pushing down evenly on the footrest with your legs.
- Reclining by caregiver: Standing on either side of the recliner, grasp the armrest with one hand and the push handle with the other hand. Push back on push handle to recline. To return, grasp push handle and pull forward to raise the recliner's back.

▲ **NOTICE: DO NOT use the footrest by itself to return the recliner to an upright position from any recline position. Doing so may damage the recliner mechanism. Follow the instructions above to operate the recliner.**

Third Position (Second Recline Position)

The third position is the **Second Recline Position** and is also known as the "Full Recline" position. This position is ideal for patient treatment, rest and reading.

To Achieve Third Position / Second Recline Position:

- Reclining by patient: From the First Recline Position, continue to push against the back by placing your hands on armrests and continue to recline yourself to the Second Recline Position. To bring yourself up, place hands on armrest and pull yourself up while leaning your body forward away from the recliner back while at the same time pushing down evenly on the footrest with your legs.
- Reclining by caregiver: Standing on either side of the recliner, grasp the armrest with one hand and push handle with the other hand. Push back on push handle to recline. To return, grasp push handle and pull forward to raise the recliner back.

Second Recline Position (Full Recline Position)

Trendelenburg Position (Also Known as Shock Position)

Info: This position can only be achieved by a caregiver.

See picture at right. Standing on either side of the recliner, grasp the armrest with one hand while holding the recliner back with the other. With your foot, push down on the **Trendelenburg activation pedal** (either side of the recliner) while gently pushing down with your hand on the recliner back until it comes to a stop.

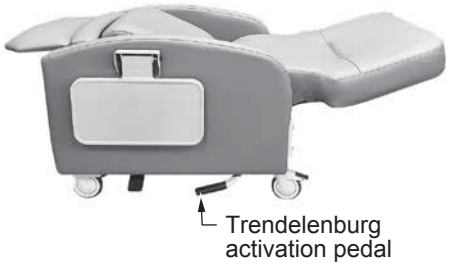

Trendelenburg Position (Shock Position)

To bring recliner out of the Trendelenburg Position, with assistance, lift the Back of the recliner up out of the Trendelenburg Position into the desired position.

PIVOT-ARM OPERATION

See pictures at right. The FR601 Clinical Care Recliner features two pivot-arms. The pivot-arms make cleaning the recliner much easier and more efficient. The pivot-arms are hinged at the back of the recliner.

Pivot-Arm Operation

⚠ **WARNING: The pivot-arm Feature is a *CAREGIVER OPERATED FEATURE*. A patient *MUST NOT* attempt operation of the pivot-arms while seated in the recliner.**

Open the Pivot-Arm

⚠ **WARNING: The caregiver must be positioned on either the left or right side of the recliner, directly in front of the pivot-arm to be operated; do not operate the pivot-arm from front or rear of recliner.**

1. Step down on the YELLOW RELEASE LEVER, located toward the front of the recliner as shown at upper right, to unlock the pivot-arm on that side.
2. Gently open up the pivot-arm, as shown at lower right, to the desired degree.
3. Once maintenance or cleaning is complete, return the arm to the locked position.

Right Pivot-Arm Shown Open

Close the Pivot-Arm:

⚠ **WARNING: The caregiver must be positioned on either the left or right side of the recliner, directly in front of the pivot-arm to be operated; do not operate the pivot-arm from front or rear of recliner.**

1. Pivot the Arm back toward the front of the recliner until the pivot-arm stops. Step down on the YELLOW RELEASE LEVER, located toward the front of the recliner. Continue to push the pivot-arm over the locking pin and then step off of the YELLOW RELEASE LEVER, thereby engaging the locking pin in the arm latch.
2. Pull outward on the arm to ensure the arm is properly locked before use of the recliner.

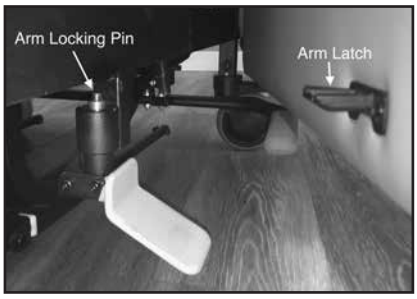

Latch Pivot-Arm

⚠ **WARNING: Recliners have moving parts that create potential pinch points. When the pivot-arms are open, those points are exposed. DO NOT leave patients in the recliner unattended with the pivot-arms in the open position. DO NOT leave the recliner unattended or reclined with the pivot-arms in the unlocked, open position. DO NOT transport a patient in the recliner with the pivot-arms in the unlocked, open position.**

⚠ **WARNING: The pivot-arm MUST NOT be used as a patient or caregiver support while open. The recliner may tip and become unstable if weight is placed on the pivot-arm when in the open position.**

▲ **CAUTION: When opening the pivot-arms, ensure there is nothing in the way of the pivoting arm. Damage to the vinyl upholstery may result if the pivot-arm impacts any object. The pivot-arms are best operated when the recliner is in the upright position.**

FOOTPLATE OPERATION

Footplate Shown in Extended Position

The Series FR601 Recliner features a self-storing footplate, shown above, for patient comfort and convenience during patient transport. The footplate is easily extended when needed and can be stored safely out of the way when not in use. To operate the footplate, pull it out from underneath the recliner until fully extended — the patient can now rest their feet on the footplate while being transported. To return the footplate to the stored position, push the footplate back underneath the recliner until it stops and is safely stored under the recliner.

⚠ **WARNING: Before using the Footplate, ensure the casters are in the locked position and the Footplate is in the fully-extended position.**

⚠ **WARNING: Caregivers: Exercise caution when moving around the front of the recliner when the Footplate is in the extended position.**

⚠ **WARNING: Caregivers: Always advise patients that the Footplate has been extended. DO NOT allow a patient to stand on the Footplate unattended.**

RECLINERS WITH HEAT AND MASSAGE OR HEAT ONLY FEATURE

HEAT AND MASSAGE: FR601PH, FR601UH, FR601PHL, FR601UHL
HEAT ONLY: FR601PHO, FR601UHO, FR601PHOL, FR601UHOL

INSTALLATION AND OPERATING GUIDE

Tools required: masking or packaging tape

⚠ **WARNING: Important! Read and understand these instructions before assembling or using the Specialty Healthcare Seating Heat and Massage / Heat Only Unit. If you do not understand any part of these warnings, cautions or instructions, contact a healthcare professional for direction in the use of this product. If the Heat and Massage / Heat Only Unit is not properly assembled, personal injury and damage to the Heat and Massage / Heat Only Unit could result.**

⚠ **WARNING: The recliner seat and back heating elements are wired to operate in series only. Do not change the system wiring in any way.**

⚠ **WARNING: If components are damaged or missing, contact your Graham-Field authorized distributor immediately. DO NOT use substitute parts. Use only Lumex replacement parts. The use of non-Lumex replacement parts could cause personal injury, property damage, and void the warranty.**

⚠ **WARNING: GF Health Products, Inc. assumes no responsibility for any damage or injury caused by improper assembly or use of this product.**

Description

The Heat and Massage Unit offers three levels of seat and back heat, as well as a gentle or firm massage function for just the lower back or both lower and upper back; the Heat Only Unit offers three levels of seat and back heat. The Lumex Healthcare Seating Heat and Massage / Heat Only Unit is a low-voltage (12V) Heat and Massage / Heat Only Unit, controllable by the user and / or caregiver via a handheld pendant. It is designed to enhance the comfort of the patient / resident during the use of Lumex Clinical Care Recliners.

Connection

The Heat and Massage Unit comes pre-installed in Lumex Clinical Care Recliners with the Heat and Massage Option. The Heat Only Unit comes pre-installed in Lumex Clinical Care Recliners with the Heat Only Option. During recliner shipment, the Heat and Selector Switch connections are disconnected. One connection at the control box is required to make the unit functional.

Main Components

1. All Heat and Massage / Heat Only functions are controlled by the handheld pendant.

2. The handheld pendant comes pre-installed and is shipped within the back compartment. To store the pendant when not in use or for caregiver use, place it in the pendant storage bracket mounted on the back of the recliner as shown at right.

Handheld Heat and Massage Pendant
Shown in Storage Bracket on Back of Recliner

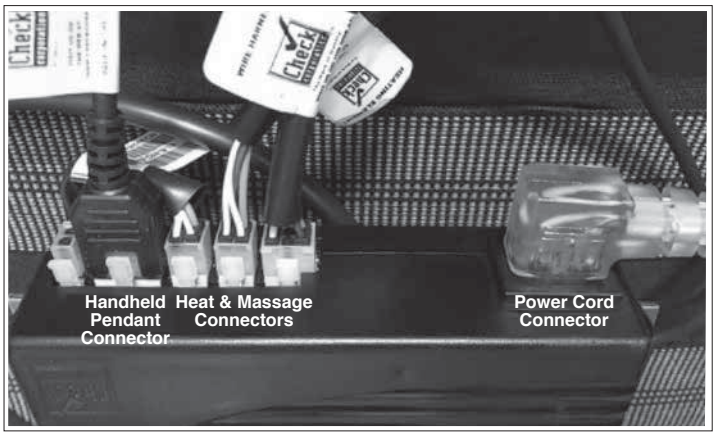

**Heat and Massage Feature —
Control Module and Transformer Unit
Showing All Connections Correctly Made**

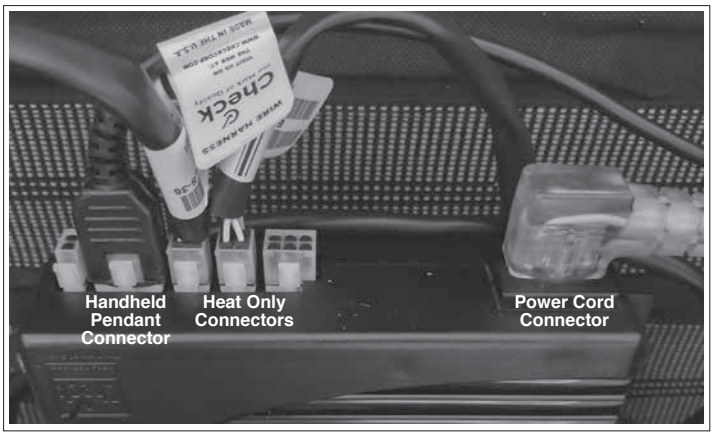

**Heat Only Feature —
Control Module and Transformer Unit
Showing All Connections Correctly Made**

3. The Control Module and Transformer, shown above, are contained in a single unit mounted in the back compartment. The 8-foot power cord plugs into the wall AC outlet.

Heat and Massage / Heat Only Installation Instructions

1. Place the back cushion over the vertical bayonet lugs of the recliner mechanism. Secure the back on each side with the threaded screw knobs per the previous ***Upholstered Back Assembly*** instructions.

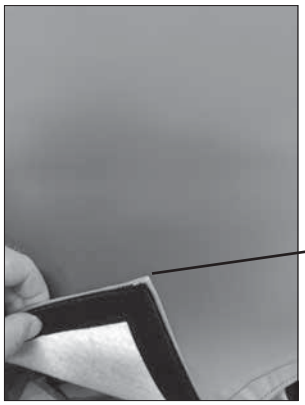

Raise Back to Access Back Compartment

Similar Model's Back Shown Properly Installed

2. Raise the back skirt on the lower rear of the back cushion, as shown at left above, and use masking or packaging tape to temporarily secure it up and out of the way. This will permit uninterrupted access to the back compartment while making the cable connection.
3. Remove the handheld pendant and power cord from the back compartment. Place the handheld pendant in the storage bracket as shown at right above.

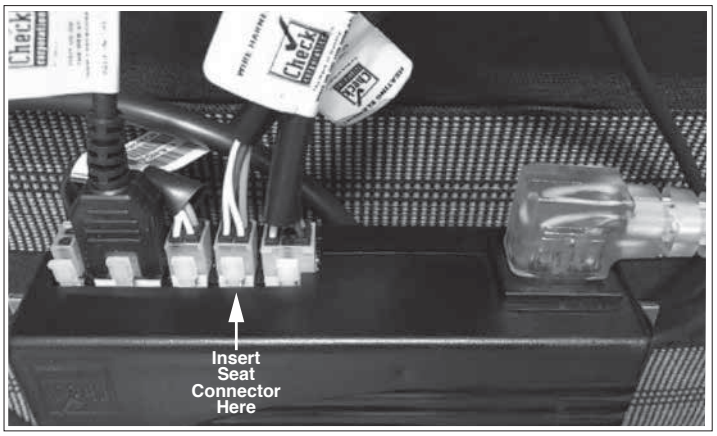

**Heat and Massage Feature —
Install Seat Connector**

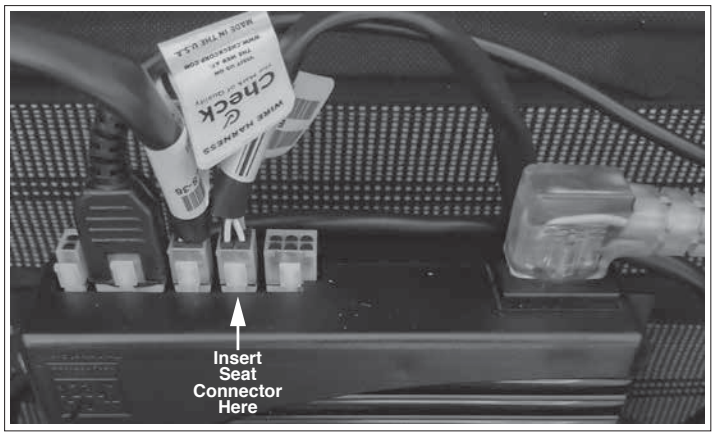

**Heat Only Feature —
Install Seat Connector**

4. There is only one connection to make — push the seat connector firmly into the control module until its locking tabs snap into place as shown above.

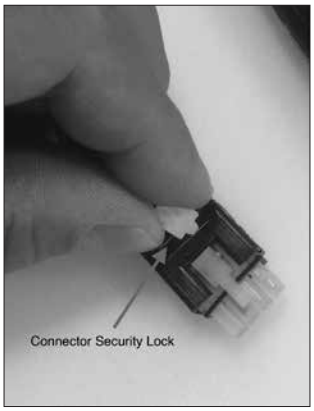

Connector Security Lock

5. If you need to replace the Hand Pendant, remove the small white connector security lock as shown above.
6. Remove the tape holding the back flap. Lower the flap and seal the compartment by pressing firmly around the edges of the back flap.
7. The Heat and Massage / Heat Only Unit is now ready for operation. Instructions for use follow.

▲ **NOTICE: Before rolling the recliner, ensure the power cord is unplugged from the AC outlet.**

Heat and Massage / Heat Only Unit Operation Instructions

1. Plug the power cord into any grounded outlet.

Handheld Pendant
Heat and Massage

Handheld Pendant
Heat Only

2. The Heat and Massage / Heat Only Unit is operated using the Handheld Pendant, shown above.

Heat and Massage

Heat Only

3. **The Heat and Massage Pendant Selector Switch Faceplate**, shown at above left, has two membrane switches. The left switch controls the Massage Function and the right switch controls the Heat Function. You can use either the Heat or Massage or both functions at the same time.

   The Heat Only Pendant Selector Switch Faceplate, shown at above right, has a single membrane switch to control the Heat Only Function.

4. **Heat and Massage *MASSAGE* Option:** Press the ***MASSAGE*** switch to start this function. The Massage Function Settings are as follows:
   a) Press selector switch for Setting 1: Gentle Lower Back Massage.
   b) Press selector switch AGAIN for Setting 2: Firm Lower Back Massage.
   c) Press selector switch AGAIN for Setting 3: Gentle Upper and Lower Back Massage.
   d) Press selector switch AGAIN for Setting 4: Firm Upper and Lower Back Massage.
   e) Press selector switch AGAIN: Massage function Shuts Off.
5. **Heat and Massage** or **Heat Only *HEAT* Option**: Press the ***HEAT*** switch to start this function. The Heat Function Settings are as follows:
   a) Press selector switch for Setting 1: High Heat, 104°F (40°C), brightest LED.
   b) Press selector switch AGAIN for Setting 2: Medium Heat, 101°F (38.6°C), bright LED.
   c) Press selector switch AGAIN for Setting 3: Low Heat, 100°F (37.8°C), dim LED.
   d) Press selector switch AGAIN: Heat function shuts off.
   e) There is a small red indicator light, which illuminates only during the Heat function, in the selector switch. The light's brightness is determined by the Heat level being used:
   Brightest = High Heat; **Dimmest = Low Heat.**
6. The Unit automatically shuts off at the following times:
   a) **HEAT FUNCTION:** After one hour of continuous use at the same level.
   b) **MASSAGE FUNCTION:** After fifteen minutes of continuous use at the same level.
   c) To restart the Unit, follow previous steps 4 and 5.

Heat and Massage / Heat Only Unit Troubleshooting Guide

The cables and connections need to be validated. This will require the services of a maintenance person and a clear working area.

1. INSPECTION: Perform the following checks. If a working recliner of the same model is available, use it for comparison.
   a) Is the AC cord properly connected to the power supply? Is the cable from the power supply to the control module junction box in place?
   b) With the power supply AC cord plugged into a live AC outlet, does the small light to the left of the white seat symbol (located on the switch) light up when the switch is pressed repeatedly or is there any indication of massage operation?

⚠ **WARNING: Disconnect the power cord from the AC outlet before performing the following steps!**

   c) Is there any sign of external damage to the handheld pendant or wire?
   d) Is there any sign of external damage to the recliner?
   e) Do any of the cables show any sign of damage or pinch points?
   f) Are all cable connections to the control module in place? Are the connectors fully engaged?
   g) Are any of the connectors damaged?
   h) Are the wires within the connectors attached to the pins? Each wire may have to be tugged lightly to check if the wire is still crimped to the pin.

2. POST-INSPECTION:
   a) If improper or loose connections are found, reconnect them firmly (unless a loose wire has been found). Plug the power supply AC cord into a live wall socket and operate the unit through all functions.
   b) If the handheld pendant or wire is damaged, notify Graham-Field so that a handheld pendant can be sent for replacement.
   c) If damage to any other electrical cable or component, or disconnected wires are found, please notify Graham-Field.
3. ACTIONS:
   a) If full operation is restored, please advise Graham-Field of your successful outcome.
   b) If the fault cannot be corrected by simple re-connection, please inform Graham-Field of the results of your inspection in detail so that we may determine the appropriate action to be taken.

If you have any questions about the setup and / or operation of the Heat and Massage / Heat Only Unit, call the Graham-Field Technical Support Group at 1.770.368.4700.

CARE AND MAINTENANCE

⚠ **WARNING: Inspect all components periodically and replace as needed.**

EVERY THREE MONTHS

- Check and clean casters.
- Tighten bolts in each leg that secure caster into frame.
- Check caster brakes.
- Check and clean lock recline mechanism.
- Check recliner mechanism for operation in all positions, including Trendelenburg Position, with assistant seated in recliner.

UPHOLSTERY MAINTENANCE AND STAIN REMOVAL

We recommend cleaning at least once a week to extend the lifespan of the upholstery. This prevents dirt and other contaminants from building up and stains from becoming permanent. If there is a spill, wipe off any excess right away with a dry cloth, making sure not to spread it all over the surface.

- Clean the whole surface in circular motions using liquid hand soap (pH neutral) and water (1 part soap to 9 parts water). Wipe with a clean damp cloth to get rid of any excess soap.
- Repeat as needed and then let dry.

For Guardian, Patriot Plus, Renaissance and Savoy fabrics only

If there is any build-up that can't be removed with soapy water, then use this as a last resort. Mixture: 1 part isopropyl alcohol to 1 part water.

Info: Using alcohol on a regular basis can affect the properties of the product.

- Once a month, you can use a soft-bristle brush for a deeper cleaning.

Info: Light colors need more care, more often.

Info: The cleaning products recommended were used in a laboratory setting. Spradling Group® has no relationship with the manufacturers of those cleaning products.

Color Transfer

Certain clothing and accessory dyes (such as those used on denim jeans) may migrate to lighter colors. This phenomenon is increased by humidity and temperature and is irreversible.

Check compatibility when using this product in combination with painted or varnished surfaces.

Disinfectants

In addition to cleaning, healthcare facilities maintain disinfecting regimens to reduce the spread of infections. There is a wide variety of available biocides that include bleaches, peroxides and quaternary ammonium products, among others. They should always be used at the recommended dilution, never in concentrated form. To prolong the life of coated fabrics, the disinfectants should be rinsed off after each use.

Info: Misuse of disinfectants is the major source of surface deterioration. Spradling International, Inc.® continually evaluates cleaners/disinfectants, and a list of those tested can be found on their website.

Abrasion test results exceeding ACT Performance Guidelines are not an indicator of product lifespan. Multiple factors affect fabric durability and appearance retention.

This information is not a guarantee and does not relieve the user from the responsibility of the proper and safe use of the product and all cleaning agents. The use of certain agents can be harmful to the surface appearance and lifespan of vinyl. Spradling, its agents, and assignees assume no responsibility resulting from the use of such cleaning agents to the vinyl.

Check compatibility when using this product in combination with painted or varnished surfaces.

Spradling Group® and Spradling International, Inc.® are registered trademarks of Spradling Holdings, Inc.

CDC RECOMMENDATIONS
CLEANING AND DISINFECTING STRATEGIES FOR ENVIRONMENTAL SURFACES IN PATIENT-CARE AREAS FOR VINYL UPHOLSTERY, WALL COVERINGS AND FLOORING

- Select EPA-registered disinfectants, if available, and use them in accordance with the manufacturer's instructions.
- Do not use high-level disinfectants / liquid chemical sterilants for disinfection of either noncritical instruments and devices or any environmental surfaces; such use is counter to label instructions for these toxic chemicals.
- Follow manufacturers' instructions for cleaning and maintaining noncritical medical equipment.
- In the absence of a manufacturer's cleaning instructions, follow certain procedures:
  - Clean noncritical medical equipment surfaces with a detergent / disinfectant.
  - Do not use alcohol to disinfect large environmental surfaces.
  - Use barrier protective coverings as appropriate for noncritical surfaces that are:
    - Touched frequently with gloved hands during the delivery of patient care.
    - Likely to become contaminated with blood or body substances.
    - Difficult to clean (e.g., computer keyboards).

- Keep housekeeping surfaces (e.g., floors, walls, tabletops) visibly clean on a regular basis and clean up spills promptly.
- Use a one-step process and an EPA-registered hospital detergent / disinfectant designed for general housekeeping purposes in patient-care areas where:
  - Uncertainty exists as to the nature of the soil on the surfaces (whether it is blood or body fluid or just normal dust or dirt).
  - Uncertainty exists regarding the presence of multi drug resistant organisms on such surfaces.
- Detergent and water are adequate for cleaning surfaces in nonpatient-care areas (e.g., administrative offices). Clean and disinfect high-touch surfaces on a more frequent schedule than minimal-touch housekeeping surfaces. Clean walls, blinds, and window curtains in patient-care areas when they are visibly dusty or soiled.
- Do not perform disinfectant fogging in patient-care areas.
- Avoid large-surface cleaning methods that produce mists or aerosols, or disperse dust in patient-care areas.
- Follow proper procedures for effective uses of mops, cloths, and solutions.
  - Prepare cleaning solutions daily or as needed, and replace with fresh solution frequently according to facility policies and procedures.
  - Change the mop head at the beginning of each day and also as required by facility policy, or after cleaning up large spills of blood or other body substances.
  - Clean mops and cloths after use and allow to dry before reuse; or use single-use, disposable mop heads and cloths.
- When performing low- or intermediate-level disinfection of environmental surfaces in nurseries and neonatal units, avoid unnecessary exposure of neonates to disinfectant residues on these surfaces by using EPA-registered germicides in accordance with manufacturers' instructions and safety advisories.

TECHNICAL SPECIFICATIONS

Overall Height	51 1/2" (130.8 cm)
Overall Width	34 1/2" (87.6 cm)
Overall Depth	38" (96.5 cm)
Width Between Arms	25" (63.5 cm)
Arm Height from Floor	30" (76.2 cm)
Arm Height from Seat	8" (20.3 cm)
Seat Height	22" (55.9 cm)
Seat Width	22 1/2" (57.2 cm)
Seat Depth	19" (48.3 cm")
Depth Fully Reclined in Trendelenburg	72" / 182.9 cm)
Width with Both Side Tables in Upright Position	54" (137.2)
Shipping Weight	240 lb (108.8 kg)
Maximum Weight Capacity	400 lb (181.4 kg), EVENLY DISTRIBUTED

For complete technical specifications, call the Graham-Field Technical Support Group at 1.770.368.4700.

DISPOSAL AND KEY TO SYMBOLS

DISPOSAL

Lumex Recliner equipment and accessories can be disposed of.

We recommend disassembling and dividing the equipment and components into different waste groups such as: metal, cable, electronic, recoverable resource and plastic for recycling or combustion.

Most plastic components are provided with a plastic types code and fiber content to aid sorting of plastic parts.

Product	Metal Scrap	Cable Scrap	Electronic Scrap	Plastic Recycling or Combustion
FR601P	X	X	N/A	X
FR601PH	X	X	X	X
FR601PHO	X	X	X	X
FR601U	X	X	N/A	X
FR601UH	X	X	X	X
FR601UHO	X	X	X	X
FR601PL	X	X	N/A	X
FR601PHL	X	X	X	X
FR601PHOL	X	X	X	X
FR601UL	X	X	N/A	X
FR601UHL	X	X	X	X
FR601UHOL	X	X	X	X

KEY TO SYMBOLS

The following symbols are used on Lumex Recliner product labels.

	MANUFACTURER
	FRAGILE, HANDLE WITH CARE
	CE MARK
	CAUTION
EC REP	EUROPEAN AUTHORIZED REPRESENTATIVE
UDI	UNIQUE DEVICE IDENTIFIER
	GENERAL WARNING SIGN
	KEEP DRY
	ELECTRICAL AND ELECTRONIC EQUIPMENT

	CONSULT INSTRUCTIONS FOR USE
MD	MEDICAL DEVICE

CE CERTIFICATION (SERIES FR601P / FR601PL / FR601U / FR601UL ONLY)

Info: CE Certification applies ONLY to Series FR601P Clinical Care Recliner with Pivot-Arm and Upholstered Arms, Series FR601PL Clinical Care Recliner with Pivot-Arm, Upholstered Arms and Extended Legrest, Series FR601U Clinical Care Recliner with Pivot-Arm and Urethane Arms, Series FR601UL Clinical Care Recliner with Pivot-Arm, Urethane Arms and Extended Legrest.

CE Certification DOES NOT apply to the following recliners:

Series FR601PH Clinical Care Recliner with Pivot-Arm, Upholstered Arms, and Heat and Massage

Series FR601PHL Clinical Care Recliner with Pivot-Arm, Upholstered Arms, Heat and Massage, and Extended Legrest

Series FR601PHO Clinical Care Recliner with Pivot-Arm, Upholstered Arms, and Heat Only

Series FR601PHOL Clinical Care Recliner with Pivot-Arm, Upholstered Arms, Heat Only, and Extended Legrest

Series FR601UL Clinical Care Recliner with Pivot-Arm, Urethane Arms, and Extended Legrest

Series FR601UHL Clinical Care Recliner with Pivot-Arm, Urethane Arms, Heat and Massage, and Extended Legrest

Series FR601UHOL Clinical Care Recliner with Pivot-Arm, Urethane Arms, Heat Only, and Extended Legrest

GF Health Products, Inc.
One Graham-Field Way, Atlanta, Georgia 30340-3140
Tel: 1.770.368.4700 Web: www.grahamfield.com

EC REP
EC Authorized Representative
CEpartner4U BV, ESDOORNLAAN 13
3951 DB MAARN The Netherlands
+31 (0)6 516.536.26
www.cepartner4u.com

LIMITED WARRANTY

SCOPE OF WARRANTY

GF Health Products, Inc. (GF) warrants to the original purchaser only that it will replace or repair components, at GF's sole discretion, that are defective in material or workmanship under normal use and service. All warranties are conditioned upon the proper use of the products strictly in accordance with good commercial practice and applicable GF instructions and manuals, including proper use and maintenance. To the extent that a component is warranted by a third party, GF conveys all of its rights under that warranty to the original purchaser, to the extent permitted. This limited warranty shall only apply to defects that are reported to GF's customer service team within the applicable warranty period and which, upon examination by GF or its authorized representative, prove to be a warranty item. This limited warranty is not transferable.

The warranted components and time period are set forth below:

Frame: ..... ten (10) years
Heat and Massage Unit: ..... two (2) years
Heat Only Unit:..... two (2) years
Casters: ..... one (1) year
Recline Mechanism: ..... one (1) year
Upholstered Components: ..... one (1) year

The applicable warranty period shall commence from date of shipment to the original customer, unless there is an expiration date on the component in which case the warranty shall expire on the earlier of warranty period or the expiration date.

OBTAINING WARRANTY SERVICE

A GF Customer Service Representative must authorize warranty service. Please contact the GF Customer Service department by calling 1.770.368.4700, sending a fax request to 1.770.368.2386 or by e-mailing a request to cs@grahamfield.com. Specific directions will be provided by the Customer Service Representative. Failure to abide by the specific directions will result in denial of the warranty claim.

EXCLUSIONS

The warranty does not cover and GF shall not be liable for the following:

1) Defects, damage, or other conditions caused, in whole or in part, by misuse, abuse, negligence, alteration, accident, freight damage, tampering or failure to seek and obtain repair or replacement in a timely manner;
2) Products which are not installed, used, or properly cleaned and maintained as required in the official manual for the applicable product;
3) Products considered to be of a non-durable nature including, but not limited to: filters, fuses, gaskets, lubricants, and charts;
4) Accessories or parts not provided by GF;
5) Charges by anyone for adjustments, repairs, replacement parts, installation or other work performed upon or in connection with such products which are not expressly authorized in writing, in advance, by GF;
6) Any labor or shipping charges incurred in the replacement part installation or repair;
7) Costs and expenses of regular maintenance and cleaning; and
8) Representations and warranties made by any person or entity other than GF.

ENTIRE WARRANTY, EXCLUSIVE REMEDY AND CONSEQUENTIAL DAMAGES DISCLAIMER

THIS WARRANTY IS GF'S ONLY WARRANTY AND IS IN LIEU OF ALL OTHER WARRANTIES, EXPRESS OR IMPLIED. GF MAKES NO IMPLIED WARRANTIES OF ANY KIND INCLUDING ANY IMPLIED WARRANTIES OF MERCHANTABILITY OR FITNESS FOR A PARTICULAR PURPOSE. IF ANY MODEL OR SAMPLE WAS SHOWN TO THE CUSTOMER, SUCH MODEL OR SAMPLE WAS USED MERELY TO ILLUSTRATE THE GENERAL TYPE AND QUALITY OF THE PRODUCT AND NOT TO REPRESENT THAT THE PRODUCT WOULD NECESSARILY CONFORM TO THE MODEL OR SAMPLE IN ALL RESPECTS. THIS WARRANTY IS LIMITED TO THE REPAIR OR REPLACEMENT OF THE DEFECTIVE PARTS. GF SHALL NOT BE LIABLE FOR AND HEREBY DISCLAIMS ANY DIRECT, SPECIAL, INDIRECT, INCIDENTAL, EXEMPLARY OR CONSEQUENTIAL DAMAGES, INCLUDING, BUT NOT LIMITED TO: DAMAGES FOR LOSS OF PROFITS OR INCOME, LOSS OF USE, DOWNTIME, COVER, OR EMPLOYEE OR INDEPENDENT CONTRACTOR WAGES, PAYMENTS AND BENEFITS.

The warranties contained herein contain all the representations and warranties with respect to the subject matter of this document, and supersede all prior negotiations, agreements and understandings with respect thereto. The recipient of this document hereby acknowledges and represents that it has not relied on any representation, assertion, guarantee, warranty, collateral contract or other assurance, except those set out in this document.

For additional information on this product or this warranty, please contact a GF Customer Service Representative.

NOTES:

1) Additional terms and conditions may apply.
2) Freight claims must be notated on the appropriate shipping documents and must be made with immediacy. International, federal and state regulations govern specific requirements for freight claims. Failure to abide by those regulations may result in a denial of the freight claim. GF will assist you in filing the freight claim.
3) Claims for any short shipment must be made within three (3) days of the invoice date.

INDEX

A

Assembly 5

C

Care and maintenance 17

Caster operation 7

CAUTION statement, significance 3

CE Certification 21

D

Disposal 21

F

Footplate operation 11

H

Heat and massage / heat only 12

Heat and massage / heat only connection 12

Heat and massage / heat only, installation and operating guide 12

Heat and massage / heat only installation instructions 13

Heat and massage / heat only, main components 12

Heat and massage / heat only operation 15

Heat and massage / heat only troubleshooting guide 16

I

Important safety precautions 3

Info statement, significance 3

Intended use 3

Introduction 3

K

Key to symbols 20

L

Limited warranty 22

N

NOTICE statement, significance 3

O

Operation 7

P

Pivot-arm, close 10

Pivot-arm, open 10

Pivot-arm operation 10

Product description 5

R

Recliner operation 8

S

Side table, lower 8

Side table operation 8

Side table, raise 8

Symbol key 20

T

Technical specifications 19

Trendelenburg (shock) position 9

U

Upholstered back assembly 6

Upholstery maintenance and stain removal 17

Upholstery maintenance: CDC recommendations 18

Upholstery maintenance: disinfectants 18

Upholstery maintenance for Guardian, Patriot Plus, Renaissance and Savoy fabrics 18

W

WARNINGS 3

WARNING statement, significance 3

Warranty, limited 22

LUMEX®
by graham-field

Proudly designed, engineered, and assembled in the USA of domestic and globally sourced components.

Manufactured By:
GF Health Products, Inc.
One Graham-Field Way, Atlanta, GA 30340

+1 770.368.4700
Information contained herein is subject to change without notice.
The most current and complete product information can be found on our website.
www.grahamfield.com

© 2019, GF Health Products, Inc. All Rights Reserved.
Lumex is a registered trademark of GF Health Products, Inc.

LX_FR601-INS-LAB-RevE22